UTILITY & INFRASTRUCTURE BOARD

June 30, 2020 - 4:00 P.M.
Fremont Municipal Building, 2nd Floor Conference Room
400 East Military, Fremont, Nebraska (attendance is limited) and Zoom

---

Topic: Utility and Infrastructure Board Meeting
Time: Jun 30, 2020 04:00 PM Central Time (US and Canada)

Join Zoom Meeting
https://zoom.us/j/91690927429

Meeting ID: 916 9092 7429
One tap mobile
+16699009128,,91690927429# US (San Jose)
+12532158782,,91690927429# US (Tacoma)

Dial by your location
+1 669 900 9128 US (San Jose)
+1 253 215 8782 US (Tacoma)
+1 346 248 7799 US (Houston)
+1 646 558 8656 US (New York)
+1 301 715 8592 US (Germantown)
+1 312 626 6799 US (Chicago)
Meeting ID: 916 9092 7429
Find your local number: https://zoom.us/u/agFS69mCE
Meeting ID: 916 9092 7429

Find your local number: https://zoom.us/u/abLqfBJBRY
Telephone Audio Information
Call: +1 301 715 8592 US
Enter Meeting ID: **916 9092 7429**
You will be connected to the meeting.
If making a comment during a public hearing or comment period please **press *9 to electronically raise your hand** allowing the Chairman to call on you.
Once called upon to speak please press *** 6 to unmute your phone; press * 6 again to mute when finished speaking**

UTILITY & INFRASTRUCTURE BOARD

June 30, 2020 - 4:00 P.M.
Fremont Municipal Building, 2nd Floor Conference Room
400 East Military, Fremont, Nebraska (attendance is limited) and Zoom

---

REGULAR MEETING:

1. Meeting called to order

2. Roll call

CONSENT AGENDA: *All items in the consent agenda are considered to be routine by the Utility and Infrastructure Board and will be enacted by one motion. There will be no separate discussion of these items unless a Board Member or a citizen so requests, in which event the item will be removed from the consent agenda and considered separately.*

3. Approve minutes of June 9, 2020.

4. Consider Accounts Payable through June 30, 2020.

REGULAR AGENDA:

5. Receive Traffic Committee Report and consider recommendations.
6. Consider Agreement with the Nebraska Department of Transportation for the placement of Emergency Vehicle Preemption Equipment at the intersection of Highway 77 and Cloverly Road.
7. Consider bid for Substation Transformers for Substation H.
8. Consider Investment Grade Audit for the Municipal Building.
9. Consider Termination of Municipal Advisory Services with Ameritas Investment Corporation.
10. City Administrator Update (no board action is requested).
    a. Covid-19 Update and Delivery of Services
    b. Secretary Toni Vering Service Award

11. Adjournment

The agenda was posted at the Municipal Building on June 26, 2020. The agenda and enclosures are distributed to the Board and posted on the City of Fremont's website. The official current copy of the agenda is available at Municipal Building, 400 East Military, office of the City Administrator. A copy of the Open Meeting Law is posted in the 2nd floor conference room for review by the public. The Utility & Infrastructure Board reserves the right to adjust the order of items on this agenda.

CITY OF FREMONT UTILITY AND INFRASTRUCTURE BOARD
June 9, 2020 - 4:00 P.M.

A meeting of the Utility and Infrastructure Board was held on June 9, 2020 at 4:00 p.m. in the 2nd floor meeting room at 400 East Military, Fremont, Nebraska and via Zoom. The meeting was preceded by publicized notice in the Fremont Tribune and the agenda displayed in the Municipal Building. The meeting was open to the public. A continually current copy of the agenda was available for public inspection at the office of the City Administrator, 400 East Military. The agenda was distributed to the Utility and Infrastructure Board on June 8, 2020 and posted, along with the supporting documents, on the City's website. A copy of the open meeting law is posted continually for public inspection.

ROLL CALL
Roll call showed Board Members Sawtelle, Bolton, Wiese, Shelso, and Vering present. 5 present, 0 absent. Others in attendance included Brian Newton, City Administrator; Troy Schaben, Asst City Admin – Utility; Jody Sanders, Finance Dir.; Lottie Mitchell, Exec. Assist; Jeff Shanahan, Power Plant Supt.; Keith Kontor; Water/Sewer/WWTP Supt.; and Al Kaspar, Dir. Of Elec. Dist.

CONSENT AGENDA
Moved by Member Shelso and seconded by Member Bolton to approve items 3 and 4 (Minutes from May 26, 2020 and Accounts Payable through June 9, 2020. Ayes: Sawtelle, Bolton, Wiese and Shelso and Vering. Motion carried 5-0.

CONSIDER BID FOR WATER TRUCK AT LON D. WRIGHT POWER PLANT.
Shanahan gave overview. Moved by Member Wiese and seconded by Member Vering to recommend City Council approve bid from Truck Center Omaha for a water truck at the Power Plant in the amount of $144,952.00 + tax. Ayes: Bolton, Sawtelle, Shelso, Vering, and Wiese. Motion carried 5-0.

CONSIDER BID FOR MOTORGRADER FOR LON D. WRIGHT POWER PLANT.
Shanahan gave overview. Moved by Member Shelso and seconded by Member Wiese to recommend City Council approve bid from NMC for a used Caterpillar Motorgrader for the Power Plant in the amount of $110,000 + tax. Ayes: Bolton, Sawtelle, Shelso, Vering, and Wiese. Motion carried 5-0.

CONSIDER AMENDMENT #4 TO HDR REIMBURSEMENT AND INDEMNIFICATION AGREEMENT FOR WASTEWATER ENGINEERING FOR WHOLESTONE FARMS.
Schaben gave overview. Moved by Member Vering and seconded by Member Bolton to recommend City Council approve Amendment #4 to HDR Reimbursement and Indemnification Agreement for Wastewater Engineering for WholeStone Farms. Ayes: Bolton, Sawtelle, Shelso, Vering, and Wiese. Motion carried 5-0.

CONSIDER AMENDMENT #5 TO HDR CONSTRUCTION ADMINISTRATION AGREEMENT FOR ANAEROBIC LAGOON PROJECT.
Schaben gave overview. Moved by Member Shelso and seconded by Member Wiese to recommend City Council approve Amendment #5 to HDR Construction Administration Agreement for Anaerobic Lagoon Project. Ayes: Bolton, Sawtelle, Shelso, Vering, and Wiese. Motion carried 5-0.

CONSIDER SUBMITTING OPEN SEASON BID FOR ADDITIONAL CAPACITY WITH NORTHERN NATURAL GAS.
Newton gave overview. Moved by Member Vering and seconded by Member Bolton to approve submitting open season bid for additional capacity with Northern Natural Gas. Ayes: Bolton, Sawtelle, Shelso, Vering, and Wiese. Motion carried 5-0.

CITY ADMINISTRATOR UPDATE (NO BOARD ACTION IS REQUESTED).

- **a.** Newton gave update on COVID-19 and delivery of services.
- **b.** Newton and Kontor gave update on Wastewater Treatment Plant.

ADJOURNMENT
Moved by Member Bolton and seconded by Member Vering to adjourn at 4:45 p.m. Ayes: Bolton, Sawtelle, Shelso, Vering, and Wiese. Motion carried 5-0.

_____	_____
Allen Sawtelle, Chairman	Toni Vering, Secretary

_____	_____	_____
David Shelso	Michelle Wiese	Gary Bolton

STAFF REPORT

TO: Utility and Infrastructure Board (UIB)

FROM: Jody Sanders, CPA, Director of Finance

DATE: June 30, 2020

SUBJECT: Claims

Recommendation: Move to approve June 10 through June 30, 2020 claims, as well as subsequent claims due and payable before the next meeting of the UIB.

Background: Staff is requesting approval by the UIB to pay claims that will become due and payable (by virtue of contractual agreements or regulatory requirements) before the next UIB meeting.
The amount due is not known as of this staff report, but the related vendors are listed below. These approved claims will still be presented as claims at the next UIB meeting and included in the total requested by Council for approval.

- Direct deposit of employee payroll on July 9, 2020 and related withholdings remitted to pension plans, federal and state tax withholdings, and garnishments.
- Nebraska Department of Revenue – all sales tax collected and use tax owed by the utility departments.
- Transmission and energy purchases payable to Southwest Power Pool, every Tuesday.
- Transmission and energy purchases payable to Omaha Public Power District, Department of Energy/WAPA, and Cottonwood Wind Project.
- Natural gas purchases from Northern Natural Gas/US Energy, BP, Cargill, Central Plains Energy Project (CPEP), and Public Energy Authority of Kentucky (PEAK).
- Coal purchases from Navajo Transitional Energy Co., Cloud Peak Energy Resources, and Peabody Coal, and freight charges to Union Pacific.
- Progress payments to Emerson Process Management under the contract for the SCADA project.
- Bond principal and interest payments to BOK Financial NA.
- UPS weekly invoice for shipping costs, due within ten days or late fees are incurred.

There are a limited number of agencies that debit the City's bank account for credit card processing fees, kiosk fees, and bank analysis. These are based on a fee schedule.

Fiscal Impact: Utility funds claims total **$ 6,407,722.64**

PREPARED 06/08/2020 9:20:28 EXPENDITURE APPROVAL LIST
PROGRAM: GM339L REPORT PARAMETER SELECTIONS

EAL DESCRIPTION: EAL: 06082020 ANDERSEND
PAYMENT TYPES
Checks . . . . . Y
EFTs . . . . . Y
ePayables . . . . . Y
VOUCHER SELECTION CRITERIA
Voucher/discount due date 06/08/2020
All banks . . . . . A
REPORT SEQUENCE OPTIONS:
Vendor . . . . . X One vendor per page? (Y,N) . . . . . N
Bank/Vendor . . . . . One vendor per page? (Y,N) . . . . . N
Fund/Dept/Div . . . . . Validate cash on hand? (Y,N) . . . . . N
Fund/Dept/Div/Element/Obj . . . . . Validate cash on hand? (Y,N) . . . . . N
Proj/Fund/Dept/Div/Elm/Obj . . . . . .
This report is by: Vendor
Process by bank code? (Y,N) . . . . . Y
Print reports in vendor name sequence? (Y,N) . . Y
Calendar year for 1099 withholding 2020
Disbursement year/per 2020/09
Payment date 06/08/2020

VEND NO / INVOICE NO	SEQ#	VENDOR NAME / VOUCHER NO	P.O. NO	BNK	CHECK/DUE DATE	ACCOUNT NO	ITEM DESCRIPTION	CHECK AMOUNT	EFT, EPAY OR HAND-ISSUED AMOUNT
0003109	00	UPS							
5E9752230				00	06/08/2020	051-5001-940.60-79	06/06/20 Serv Chrg Share	7.75	
5E9752230				00	06/08/2020	051-5001-940.60-79	06/06/20 Serv Chrg Share	7.75	
5E9752230				00	06/08/2020	051-5105-502.60-79	Ohio Lumex Co	124.60	
5E9752230				00	06/08/2020	051-5105-502.60-79	Trescal	14.81	
5E9752230				00	06/08/2020	051-5205-580.60-79	Speak Easy Upgrade	25.95	
5E9752230				00	06/08/2020	051-5205-580.60-79	Skarshaug Testing Labs	37.52	
5E9752230				00	06/08/2020	053-6105-502.50-23	Water Samples	79.74	
							VENDOR TOTAL *	298.12	
							TOTAL EXPENDITURES ****	298.12	
						GRAND TOTAL	**********		298.12

PREPARED 06/11/2020 7:56:14 EXPENDITURE APPROVAL LIST
PROGRAM: GM339L REPORT PARAMETER SELECTIONS

EAL DESCRIPTION: EAL: 06112020 ANDERSEND
PAYMENT TYPES
Checks . . . . . Y
EFTs . . . . . Y
ePayables . . . . . Y
VOUCHER SELECTION CRITERIA
Voucher/discount due date 06/11/2020
All banks . . . . . A
REPORT SEQUENCE OPTIONS:
Vendor . . . . . X One vendor per page? (Y,N) . . . . . N
Bank/Vendor . . . . . One vendor per page? (Y,N) . . . . . N
Fund/Dept/Div . . . . . Validate cash on hand? (Y,N) . . . . . N
Fund/Dept/Div/Element/Obj . . . . . Validate cash on hand? (Y,N) . . . . . N
Proj/Fund/Dept/Div/Elm/Obj . . . . . .
This report is by: Vendor
Process by bank code? (Y,N) . . . . . Y
Print reports in vendor name sequence? (Y,N) . . Y
Calendar year for 1099 withholding 2020
Disbursement year/per 2020/09
Payment date 06/11/2020

VEND NO / INVOICE NO	SEQ#	VENDOR NAME / VOUCHER NO	P.O. NO	BNK	CHECK/DUE DATE	ACCOUNT NO	ITEM DESCRIPTION	CHECK AMOUNT	EFT, EPAY OR HAND-ISSUED AMOUNT
0000584	00	CEI							
20200611		PR0611		00	06/11/2020	051-0000-241.00-00	PAYROLL SUMMARY	EFT:	121,881.99
							VENDOR TOTAL *	.00	121,881.99
0004192	00	PAYROLL EFT DEDUCTIONS							
20200611		PR0611		00	06/11/2020	051-0000-241.00-00	PAYROLL SUMMARY	179,878.66	
							VENDOR TOTAL *	179,878.66	
							EFT/EPAY TOTAL ***		121,881.99
							TOTAL EXPENDITURES ****	179,878.66	121,881.99
						GRAND TOTAL	**********		301,760.65

Account Number	Employee Name	Social Security	Deposit Amount

Final Total 284,814.57 Count 172

PREPARED 06/16/2020 7:42:07 EXPENDITURE APPROVAL LIST
PROGRAM: GM339L REPORT PARAMETER SELECTIONS

EAL DESCRIPTION: EAL: 06162020 ANDERSEND
PAYMENT TYPES
Checks . . . . . Y
EFTs . . . . . Y
ePayables . . . . . Y
VOUCHER SELECTION CRITERIA
Voucher/discount due date 06/15/2020
All banks . . . . . A
REPORT SEQUENCE OPTIONS:
Vendor . . . . . X One vendor per page? (Y,N) . . . . . N
Bank/Vendor . . . . . One vendor per page? (Y,N) . . . . . N
Fund/Dept/Div . . . . . Validate cash on hand? (Y,N) . . . . . N
Fund/Dept/Div/Element/Obj . . . . . Validate cash on hand? (Y,N) . . . . . N
Proj/Fund/Dept/Div/Elm/Obj . . . . . .
This report is by: Vendor
Process by bank code? (Y,N) . . . . . Y
Print reports in vendor name sequence? (Y,N) . . Y
Calendar year for 1099 withholding 2020
Disbursement year/per 2020/09
Payment date 06/16/2020

VEND NO / INVOICE NO	SEQ# / VOUCHER NO	VENDOR NAME / P.O. NO	BNK	CHECK/DUE DATE	ACCOUNT NO	ITEM DESCRIPTION	CHECK AMOUNT	EFT, EPAY OR HAND-ISSUED AMOUNT
0001912	00	OMAHA PUBLIC POWER DISTRICT						
9705968798	0520		00	06/15/2020	051-5105-555.50-00	May SPP Transmission Cr	EFT:	1,316.95-
9705968798	0520		00	06/15/2020	051-5305-560.60-76	May 2020 Transmission	EFT:	6,878.40
						VENDOR TOTAL *	.00	5,561.45
0005202	00	PUBLIC ENERGY AUTHORITY OF KY*WIRE*						
2005BP2018B			00	06/15/2020	057-8205-807.50-02	May 2020 2018B	69,285.00	Natural gas purchase
						VENDOR TOTAL *	69,285.00	
0003109	00	UPS						
5E9752240			00	06/15/2020	051-5001-940.60-79	06/13/20 Serv Chrg Share	7.75	
5E9752240			00	06/15/2020	051-5001-940.60-79	06/13/20 Serv Chrg Share	7.75	
5E9752240			00	06/15/2020	051-5105-502.60-79	Ohio Lumex Co	92.82	
5E9752240			00	06/15/2020	051-5105-502.60-79	MSC Industrial Supply	11.86	
5E9752240			00	06/15/2020	053-6105-502.50-23	Water Samples	43.98	
5E9752240			00	06/15/2020	057-8205-870.60-79	Heath Consultants	361.46	
						VENDOR TOTAL *	525.62	
						EFT/EPAY TOTAL ***		5,561.45
						TOTAL EXPENDITURES ****	69,810.62	5,561.45
						GRAND TOTAL **********		75,372.07

PREPARED 06/22/2020 8:57:33 EXPENDITURE APPROVAL LIST
PROGRAM: GM339L REPORT PARAMETER SELECTIONS

EAL DESCRIPTION: EAL: 06222020 ANDERSEND
PAYMENT TYPES
Checks . . . . . Y
EFTs . . . . . Y
ePayables . . . . . Y
VOUCHER SELECTION CRITERIA
Voucher/discount due date 06/22/2020
All banks . . . . . A
REPORT SEQUENCE OPTIONS:
Vendor . . . . . X One vendor per page? (Y,N) . . . . . N
Bank/Vendor . . . . . One vendor per page? (Y,N) . . . . . N
Fund/Dept/Div . . . . . Validate cash on hand? (Y,N) . . . . . N
Fund/Dept/Div/Element/Obj . . . . . Validate cash on hand? (Y,N) . . . . . N
Proj/Fund/Dept/Div/Elm/Obj . . . . . .
This report is by: Vendor
Process by bank code? (Y,N) . . . . . Y
Print reports in vendor name sequence? (Y,N) . . Y
Calendar year for 1099 withholding 2020
Disbursement year/per 2020/09
Payment date 06/22/2020

VEND NO / INVOICE NO	SEQ#	VENDOR NAME / VOUCHER NO	P.O. NO	BNK	CHECK/DUE DATE	ACCOUNT NO	ITEM DESCRIPTION	CHECK AMOUNT	EFT, EPAY OR HAND-ISSUED AMOUNT
0004597	00	BP CANADA ENERGY MARKETING *WIRE*							
21072899	May'20			00	06/22/2020	057-8205-807.50-02	Natural gas purchase	130,580.82	
							VENDOR TOTAL *	130,580.82	
							TOTAL EXPENDITURES ****	130,580.82	
						GRAND TOTAL	**********		130,580.82

PREPARED 06/25/2020 7:42:13 EXPENDITURE APPROVAL LIST
PROGRAM: GM339L REPORT PARAMETER SELECTIONS

EAL DESCRIPTION: EAL: 06252020 ANDERSEND
PAYMENT TYPES
Checks . . . . . Y
EFTs . . . . . Y
ePayables . . . . . Y
VOUCHER SELECTION CRITERIA
Voucher/discount due date 06/25/2020
All banks . . . . . A
REPORT SEQUENCE OPTIONS:
Vendor . . . . . X One vendor per page? (Y,N) . . . . . N
Bank/Vendor . . . . . One vendor per page? (Y,N) . . . . . N
Fund/Dept/Div . . . . . Validate cash on hand? (Y,N) . . . . . N
Fund/Dept/Div/Element/Obj . . . . . Validate cash on hand? (Y,N) . . . . . N
Proj/Fund/Dept/Div/Elm/Obj . . . . . .
This report is by: Vendor
Process by bank code? (Y,N) . . . . . Y
Print reports in vendor name sequence? (Y,N) . . Y
Calendar year for 1099 withholding 2020
Disbursement year/per 2020/09
Payment date 06/25/2020

VEND NO / INVOICE NO	SEQ#	VENDOR NAME / VOUCHER NO	P.O. NO	BNK	CHECK/DUE DATE	ACCOUNT NO	ITEM DESCRIPTION	CHECK AMOUNT	EFT, EPAY OR HAND-ISSUED AMOUNT
0000584	00	CEI							
20200625		PR0625		00	06/25/2020	051-0000-241.00-00	PAYROLL SUMMARY	EFT:	117,617.17
							VENDOR TOTAL *	.00	117,617.17
0001964	00	IBEW LOCAL UNION 1536							
20200611		PR0611		00	06/25/2020	051-0000-241.00-00	PAYROLL SUMMARY	1,790.94	
20200625		PR0625		00	06/25/2020	051-0000-241.00-00	PAYROLL SUMMARY	1,838.12	
							VENDOR TOTAL *	3,629.06	
0004192	00	PAYROLL EFT DEDUCTIONS							
20200625		PR0625		00	06/25/2020	051-0000-241.00-00	PAYROLL SUMMARY	176,658.58	
							VENDOR TOTAL *	176,658.58	
							EFT/EPAY TOTAL ***		117,617.17
							TOTAL EXPENDITURES ****	180,287.64	117,617.17
							GRAND TOTAL **********		297,904.81

Account Number	Employee Name	Social Security	Deposit Amount

Final Total 281,768.79 Count 173

DEPARTMENT OF UTILITIES
ELECTRONIC WITHDRAWAL LIST

FOR UTILITIES AND INFRASTRUCTURE BOARD MEETING: 6/30/20

AJ GROUP NO	VENDOR NAME	WITHDRAWAL DATE	ACCOUNT NO	ITEM DESCRIPTION	WITHDRAWAL AMOUNT
7277	VANTIV	06/05/20	051-5001-903-60-77	KIOSK CREDIT CARD FEES	16.20
				TOTAL EXPENDITURES	16.20

PREPARED 06/25/2020 9:24:38 EXPENDITURE APPROVAL LIST
PROGRAM: GM339L REPORT PARAMETER SELECTIONS

EAL DESCRIPTION: EAL: 06252020 ANDERSEND
PAYMENT TYPES
Checks . . . . . Y
EFTs . . . . . Y
ePayables . . . . . Y
VOUCHER SELECTION CRITERIA
Voucher/discount due date 07/01/2020
All banks . . . . . A
REPORT SEQUENCE OPTIONS:
Vendor . . . . . X One vendor per page? (Y,N) . . . . . N
Bank/Vendor . . . . . One vendor per page? (Y,N) . . . . . N
Fund/Dept/Div . . . . . Validate cash on hand? (Y,N) . . . . . N
Fund/Dept/Div/Element/Obj . . . . . Validate cash on hand? (Y,N) . . . . . N
Proj/Fund/Dept/Div/Elm/Obj . . . . . .
This report is by: Vendor
Process by bank code? (Y,N) . . . . . Y
Print reports in vendor name sequence? (Y,N) . . Y
Calendar year for 1099 withholding 2020
Disbursement year/per 2020/10
Payment date 07/01/2020

VEND NO / INVOICE NO	SEQ#	VENDOR NAME / VOUCHER NO	P.O. NO	BNK	CHECK/DUE DATE	ACCOUNT NO	ITEM DESCRIPTION	CHECK AMOUNT	EFT, EPAY OR HAND-ISSUED AMOUNT
0002981	00	A & D TECHNICAL SUPPLY CO INC							
0000303758		PI4447		00	07/01/2020	051-5205-580.60-64	PO NUM 053874	599.20	
							VENDOR TOTAL *	599.20	
0000959	00	ACE HARDWARE							
118984/3		PI4428		00	07/01/2020	051-5001-940.50-35	PO NUM 052066	32.07	
119178/3		PI4697		00	07/01/2020	051-5001-932.50-35	PO NUM 052066	10.68	
119178/3		PI4698		00	07/01/2020	051-5001-940.50-35	PO NUM 052066	29.04	
							VENDOR TOTAL *	71.79	
0004276	00	AIRGAS USA LLC							
9970852650		PI4438		00	07/01/2020	051-5105-502.60-76	PO NUM 053349	EFT:	917.60
9970852651		PI4439		00	07/01/2020	051-5105-502.60-76	PO NUM 053349	EFT:	53.94
							VENDOR TOTAL *	.00	971.54
0003124	00	ALLIED ELECTRONICS INC							
9012846117		PI4733		00	07/01/2020	051-0000-153.00-00	PO NUM 054036	EFT:	49.61
							VENDOR TOTAL *	.00	49.61
0001549	00	ALLIED OIL & TIRE CO INC							
502703-00		PI4427		00	07/01/2020	051-5105-502.60-61	PO NUM 051272	3,884.10	
							VENDOR TOTAL *	3,884.10	
0002612	00	ALTEC INDUSTRIES INC							
11415331		PI4512		00	07/01/2020	051-0000-154.00-00	PO NUM 053923	550.07	
50592943		PI4450		00	07/01/2020	051-5205-580.50-48	PO NUM 053981	115.08	
50592943		PI4451		00	07/01/2020	051-5205-580.60-59	PO NUM 053981	768.35	
50592943		PI4452		00	07/01/2020	051-5205-580.60-79	PO NUM 053981	13.93	
50592549		PI4453		00	07/01/2020	051-5205-580.60-59	PO NUM 053982	330.20	
50594108		PI4552		00	07/01/2020	051-5205-580.50-48	PO NUM 053992	110.47	
50594108		PI4553		00	07/01/2020	051-5205-580.60-59	PO NUM 053992	882.65	
11417492		PI4574		00	07/01/2020	051-5205-580.50-35	PO NUM 053771	484.96	
11416847		PI4575		00	07/01/2020	051-5205-580.50-48	PO NUM 053837	170.55	
11416847		PI4576		00	07/01/2020	051-5205-580.60-79	PO NUM 053837	21.14	
50594117		PI4578		00	07/01/2020	051-5205-580.50-48	PO NUM 053998	135.41	
50594117		PI4579		00	07/01/2020	051-5205-580.60-59	PO NUM 053998	609.60	
50594117		PI4580		00	07/01/2020	051-5205-580.60-79	PO NUM 053998	19.60	
							VENDOR TOTAL *	4,212.01	
0004891	00	APEX INSTRUMENTS INC							
151932		PI4649		00	07/01/2020	051-5105-502.50-35	PO NUM 054005	2,545.76	
							VENDOR TOTAL *	2,545.76	
0002869	00	AQUA-CHEM INC							
00193544		PI4619		00	07/01/2020	053-6105-502.50-52	PO NUM 052239	2,905.94	
00193545		PI4620		00	07/01/2020	053-6105-502.50-52	PO NUM 052240	1,089.00	
00193432		PI4527		00	07/01/2020	055-7105-502.50-52	PO NUM 053684	888.00	
00193432		PI4528		00	07/01/2020	055-7105-502.50-52	PO NUM 053706	817.50	
00193546		PI4680		00	07/01/2020	055-7105-502.50-52	PO NUM 053706	654.00	
							VENDOR TOTAL *	6,354.44	
0002531	00	BABCOCK & WILCOX COMPANY							

VEND NO / INVOICE NO	SEQ#	VENDOR NAME / VOUCHER NO	P.O. NO	BNK	CHECK/DUE DATE	ACCOUNT NO	ITEM DESCRIPTION	CHECK AMOUNT	EFT, EPAY OR HAND-ISSUED AMOUNT
0002531	00	BABCOCK & WILCOX COMPANY							
BA60373564		PI4415		00	07/01/2020	051-0000-153.00-00	PO NUM 052945	EFT:	7,179.70
							VENDOR TOTAL *	.00	7,179.70
9999999	00	BANG, JADE E							
000049251		UT		00	07/01/2020	051-0000-143.00-00	MANUAL CHECK	200.00	
							VENDOR TOTAL *	200.00	
9999999	00	BARR, CETAN R							
000077523		UT		00	07/01/2020	051-0000-143.00-00	MANUAL CHECK	122.85	
							VENDOR TOTAL *	122.85	
0003918	00	BASLER ELECTRIC COMPANY							
2688539		PI4442		00	07/01/2020	051-5105-502.50-35	PO NUM 053682	39,491.87	U6 EXCITER CONTROL
2688695		PI4443		00	07/01/2020	051-5105-502.50-35	PO NUM 053682	17.84	REPLACEMENT
							VENDOR TOTAL *	39,509.71	
0003860	00	BATTERIES PLUS BULBS #078							
P27302418		PI4449		00	07/01/2020	055-7205-583.50-48	PO NUM 053934	17.95	
							VENDOR TOTAL *	17.95	
0003660	00	BAUER BUILT INC							
880075857		PI4716		00	07/01/2020	051-5001-940.50-48	PO NUM 054022	605.99	
880075857		PI4717		00	07/01/2020	051-5001-940.60-59	PO NUM 054022	59.25	
880075571		PI4529		00	07/01/2020	057-8205-870.50-48	PO NUM 053890	573.25	
880075571		PI4530		00	07/01/2020	057-8205-870.60-59	PO NUM 053890	86.97	
							VENDOR TOTAL *	1,325.46	
0004000	00	BERENS-TATE CONSULTING GROUP							
05292020		PI4444		00	07/01/2020	051-5001-928.02-00	PO NUM 053851	1,166.10	
05292020		PI4445		00	07/01/2020	053-6001-928.02-00	PO# 053851	1,174.80	
05292020		PI4446		00	07/01/2020	055-7001-928.02-00	PO# 053851	659.10	
							VENDOR TOTAL *	3,000.00	
0004471	00	BERKS CAST PARTS INC							
4409		PI4695		00	07/01/2020	051-5105-502.50-35	PO NUM 050219	5,724.82	
							VENDOR TOTAL *	5,724.82	
0004558	00	BLT PLUMBING HEATING & A/C INC							
20274		PI4436		00	07/01/2020	055-7105-502.50-35	PO NUM 052106	304.55	
20274		PI4437		00	07/01/2020	055-7105-502.60-59	PO NUM 052106	348.00	
							VENDOR TOTAL *	652.55	
0005278	00	BOKF NA							
FNFRMNTCU14B				00	07/01/2020	051-0000-221.00-00	Combined Util Bond 2014B Principal and interest	EFT:	1,240,000.00
FNFRMNTCUR13				00	07/01/2020	051-0000-221.00-00	Combined Util Bond 2013 payments on outstanding	EFT:	250,000.00
FNFRMNTCU14B				00	07/01/2020	051-5001-927.27-04	Combined Util Bond 2014B bonds of the combined	EFT:	655,762.50
FNFRMNTCUR13				00	07/01/2020	051-5001-927.27-04	Combined Util Bond 2013 utilities.	EFT:	134,135.00
							VENDOR TOTAL *	.00	2,279,897.50
0003545	00	BOMGAARS SUPPLY INC							

VEND NO / INVOICE NO	SEQ#	VENDOR NAME / VOUCHER NO	P.O. NO	BNK	CHECK/DUE DATE	ACCOUNT NO	ITEM DESCRIPTION	CHECK AMOUNT	EFT, EPAY OR HAND-ISSUED AMOUNT
0003545	00	BOMGAARS SUPPLY INC							
16542380		PI4513		00	07/01/2020	051-5001-940.50-35	PO NUM 052068	138.35	
16543361		PI4609		00	07/01/2020	051-5001-940.50-35	PO NUM 052068	13.89	
16543419		PI4610		00	07/01/2020	051-5001-932.50-35	PO NUM 052068	7.82	
16542998		PI4735		00	07/01/2020	051-5001-940.50-35	PO NUM 052068	51.56	
16544802		PI4611		00	07/01/2020	053-6205-583.50-35	PO NUM 052068	11.94	
16545187		PI4668		00	07/01/2020	055-7105-502.50-35	PO NUM 052068	56.97	
16540613		PI4429		00	07/01/2020	057-8205-870.50-35	PO NUM 052068	21.39	
							VENDOR TOTAL *	301.92	
9999999	00	BOQUET, APRIL H							
000080237		UT		00	07/01/2020	051-0000-143.00-00	MANUAL CHECK	33.39	
							VENDOR TOTAL *	33.39	
0002902	00	BORDER STATES / KRIZ-DAVIS							
920101356		PI4418		00	07/01/2020	051-0000-154.00-00	PO NUM 053746	EFT:	6,328.65
920101357		PI4419		00	07/01/2020	051-0000-154.00-00	PO NUM 053818	EFT:	21.62
920101355		PI4420		00	07/01/2020	051-0000-154.00-00	PO NUM 053864	EFT:	501.25
920101358		PI4421		00	07/01/2020	051-0000-154.00-00	PO NUM 053869	EFT:	187.21
920093620		PI4554		00	07/01/2020	051-0000-154.00-00	PO NUM 053462	EFT:	16,117.06
920126428		PI4557		00	07/01/2020	051-0000-154.00-00	PO NUM 053653	EFT:	149.20
920126427		PI4563		00	07/01/2020	051-0000-154.00-00	PO NUM 053983	EFT:	192.10
920167152		PI4692		00	07/01/2020	051-0000-154.00-00	PO NUM 054007	EFT:	221.81
920167153		PI4693		00	07/01/2020	051-0000-154.00-00	PO NUM 054019	EFT:	487.46
920167154		PI4694		00	07/01/2020	051-0000-154.00-00	PO NUM 054025	EFT:	3,284.04
920170053		PI4736		00	07/01/2020	051-5105-502.50-35	PO NUM 052078	EFT:	27.88
920089186		PI4430		00	07/01/2020	055-7105-502.50-35	PO NUM 052078	EFT:	20.72
920162018		PI4701		00	07/01/2020	055-7105-502.50-35	PO NUM 052078	EFT:	180.04
							VENDOR TOTAL *	.00	27,719.04
9999999	00	BUNNELL, ROGER J							
000078945		UT		00	07/01/2020	051-0000-143.00-00	MANUAL CHECK	149.90	
							VENDOR TOTAL *	149.90	
0002836	00	BURNS & MCDONNELL ENGINEERING CO							
124404-1		PI4662		00	07/01/2020	051-5105-502.60-57	PO NUM 053815	4,810.25	
							VENDOR TOTAL *	4,810.25	
0003422	00	BUTLER COUNTY LANDFILL INC							
00696564		PI4524		00	07/01/2020	051-5205-580.60-61	PO NUM 052172	281.83	
							VENDOR TOTAL *	281.83	
9999999	00	CAMPBELL, TRACY L							
000035935		UT		00	07/01/2020	051-0000-143.00-00	MANUAL CHECK	50.89	
							VENDOR TOTAL *	50.89	
0004518	00	CAPPEL AUTO SUPPLY INC							
2634-00-019855		PI4523		00	07/01/2020	051-5001-940.50-35	PO NUM 052100	131.25	
2634-00-019854		PI4531		00	07/01/2020	051-5001-940.50-35	PO NUM 053933	320.70	
2634-00-019984		PI4533		00	07/01/2020	051-5001-940.50-35	PO NUM 053952	352.98	

VEND NO / INVOICE NO	SEQ#	VENDOR NAME / VOUCHER NO	P.O. NO	BNK	CHECK/DUE DATE	ACCOUNT NO	ITEM DESCRIPTION	CHECK AMOUNT	EFT, EPAY OR HAND-ISSUED AMOUNT
0004518	00	CAPPEL AUTO SUPPLY INC							
2634-00-019984		PI4534		00	07/01/2020	051-5001-940.60-79	PO NUM 053952	13.91	
2634-00-020000		PI4705		00	07/01/2020	051-5001-940.50-35	PO NUM 052100	46.74	
2634-00-020927		PI4706		00	07/01/2020	051-5105-502.50-48	PO NUM 052100	49.28	
2634-00-019452		PI4520		00	07/01/2020	051-5205-580.50-48	PO NUM 052100	140.71	
2634-00-019517		PI4521		00	07/01/2020	051-5205-580.50-48	PO NUM 052100	34.88	
2634-00-019583		PI4522		00	07/01/2020	051-5205-580.50-48	PO NUM 052100	54.57-	
2634-00-019369		PI4519		00	07/01/2020	053-6205-583.50-48	PO NUM 052100	122.91	
2634-00-020933		PI4707		00	07/01/2020	053-6205-583.50-48	PO NUM 052100	26.20-	
2634-00-020383		PI4571		00	07/01/2020	055-7105-502.50-35	PO NUM 052100	44.96	
							VENDOR TOTAL *	1,177.55	
0004144	00	CARPENTER PAPER COMPANY							
337744		PI4560		00	07/01/2020	051-0000-154.00-00	PO NUM 053935	244.67	
							VENDOR TOTAL *	244.67	
0000251	00	CB&I LLC							
374221336	#14	PI4639		00	07/01/2020	055-7105-502.60-58	PO NUM 049974 Egg-shaped digester project at at WWTP Progress payment	EFT:	420,839.10
							VENDOR TOTAL *	.00	420,839.10
0003817	00	CED AUTOMATION OMAHA							
5411-607473		PI4424		00	07/01/2020	051-0000-155.00-00	PO NUM 053946	521.05	
5411-607478		PI4425		00	07/01/2020	051-0000-155.00-00	PO NUM 053946	1,004.61	
5411-608197		PI4561		00	07/01/2020	051-0000-153.00-00	PO NUM 053946	519.08	
5411-607669		PI4666		00	07/01/2020	051-0000-155.00-00	PO NUM 053946	328.51	
5411-607687		PI4532		00	07/01/2020	051-5105-502.50-35	PO NUM 053946	387.70	
							VENDOR TOTAL *	2,760.95	
0002951	00	CENTRAL STATES GROUP							
1397361-00		PI4422		00	07/01/2020	051-0000-153.00-00	PO NUM 053919	600.90	
1397361-00		PI4448		00	07/01/2020	051-5105-502.50-35	PO NUM 053919	173.79	
							VENDOR TOTAL *	774.69	
0002675	00	CENTURYLINK							
402D250414		0620PI4431		00	07/01/2020	051-5001-922.50-53	PO NUM 052104	588.23	
402D250415		0620PI4432		00	07/01/2020	051-5001-922.50-53	PO NUM 052104	588.23	
4027216169		0620PI4433		00	07/01/2020	051-5001-922.50-53	PO NUM 052104	94.79	
4027216223		0620PI4434		00	07/01/2020	051-5001-922.50-53	PO NUM 052104	92.00	
4027219747		0620PI4435		00	07/01/2020	051-5001-922.50-53	PO NUM 052104	54.18	
4027272600		0620PI4672		00	07/01/2020	051-5001-922.50-53	PO NUM 052104	142.45	
4027272606		0620PI4673		00	07/01/2020	051-5001-922.50-53	PO NUM 052104	415.88	
4027272654		0620PI4674		00	07/01/2020	051-5001-922.50-53	PO NUM 052104	55.66	
							VENDOR TOTAL *	2,031.42	
0005031	00	CENTURYLINK - BUSINESS SERVICES							
1493443558		PI4675		00	07/01/2020	051-5001-922.50-53	PO NUM 052212	326.08	
							VENDOR TOTAL *	326.08	
0004474	00	CIRCUIT BREAKER SALES CO INC							
30578-A		PI4678		00	07/01/2020	051-5105-502.60-59	PO NUM 053629	7,500.00	

VEND NO / INVOICE NO	SEQ#	VENDOR NAME / VOUCHER NO	P.O. NO	BNK	CHECK/DUE DATE	ACCOUNT NO	ITEM DESCRIPTION	CHECK AMOUNT	EFT, EPAY OR HAND-ISSUED AMOUNT
0004474	00	CIRCUIT BREAKER SALES CO INC							
30578-A		PI4679		00	07/01/2020	051-5105-502.60-79	PO NUM 053629	337.33	
							VENDOR TOTAL *	7,837.33	
0003736	00	CLEAN HARBORS ENVIRONMENTAL							
1003248262		PI4565		00	07/01/2020	051-5105-502.60-61	PO NUM 051234	3,259.20	
1003327032		PI4696		00	07/01/2020	051-5105-502.60-61	PO NUM 051234	937.09	
							VENDOR TOTAL *	4,196.29	
9999999	00	CLEMENTS, JOY							
000076683		UT		00	07/01/2020	051-0000-143.00-00	MANUAL CHECK	115.99	
							VENDOR TOTAL *	115.99	
0003615	00	COLE PAPERS INC							
9838326		PI4440		00	07/01/2020	051-5001-940.50-35	PO NUM 053451	EFT:	16.05
9841040		PI4441		00	07/01/2020	051-5001-940.50-35	PO NUM 053451	EFT:	32.10
							VENDOR TOTAL *	.00	48.15
9999999	00	COPE, SPENCER							
000012229		UT		00	07/01/2020	051-0000-143.00-00	MANUAL CHECK	311.88	
							VENDOR TOTAL *	311.88	
0004152	00	CORE & MAIN LP							
M414143		PI4623		00	07/01/2020	053-6205-583.50-35	PO NUM 053467	2,295.76-	
M224462		PI4625		00	07/01/2020	053-6205-583.50-35	PO NUM 053790	3,194.43	
							VENDOR TOTAL *	898.67	
9999999	00	COREAS, ISAIAS							
000076267		UT		00	07/01/2020	051-0000-143.00-00	MANUAL CHECK	48.55	
							VENDOR TOTAL *	48.55	
0005100	00	COTTONWOOD WIND PROJECT LLC							
571449 May 20				00	07/01/2020	051-5105-555.50-00	Wind energy purchase	EFT:	295,066.81
							VENDOR TOTAL *	.00	295,066.81
9999999	00	CRANCE, SEAN							
000071887		UT		00	07/01/2020	051-0000-143.00-00	MANUAL CHECK	44.38	
							VENDOR TOTAL *	44.38	
9999999	00	CRAVEN, TYLER A							
000077515		UT		00	07/01/2020	051-0000-143.00-00	MANUAL CHECK	71.58	
							VENDOR TOTAL *	71.58	
0004480	00	CSI SOUTH SIDE PRESS							
26151		PI4426		00	07/01/2020	051-5001-903.50-31	PO NUM 050360	1,187.17	
							VENDOR TOTAL *	1,187.17	
0001643	00	CULLIGAN OF OMAHA							
979053		PI4572		00	07/01/2020	055-7105-502.50-95	PO NUM 052423	31.00	
							VENDOR TOTAL *	31.00	
0003843	00	DAKOTA SUPPLY GROUP							

VEND NO / INVOICE NO	SEQ#	VENDOR NAME / VOUCHER NO	P.O. NO	BNK	CHECK/DUE DATE	ACCOUNT NO	ITEM DESCRIPTION		CHECK AMOUNT	EFT, EPAY OR HAND-ISSUED AMOUNT
0003843	00	DAKOTA SUPPLY GROUP								
S100217826-001		PI4730		00	07/01/2020	057-0000-154.00-00	PO NUM 054017		EFT:	7,561.04
							VENDOR TOTAL *		.00	7,561.04
0003185	00	DEPARTMENT OF ENERGY								
BFPB002860520				00	07/01/2020	051-5105-555.50-00	May 2020	Hydro electric power purchase	EFT:	41,300.43
							VENDOR TOTAL *		.00	41,300.43
0002897	00	DIERS INC								
06112020		PI4676		00	07/01/2020	051-5001-950.80-50	PO NUM 052972	Replacement truck CCR 2020-009	EFT:	30,425.00
5017729		PI4514		00	07/01/2020	051-5205-580.50-48	PO NUM 052071		EFT:	60.80
5017786		PI4515		00	07/01/2020	055-7105-502.50-48	PO NUM 052071		EFT:	85.15
5017803		PI4516		00	07/01/2020	055-7105-502.50-48	PO NUM 052071		EFT:	43.54
							VENDOR TOTAL *		.00	30,614.49
0001313	00	DILLON CHEVROLET FREMONT INC, SID								
128005		PI4699		00	07/01/2020	053-6205-583.50-48	PO NUM 052072		39.02	
128006		PI4700		00	07/01/2020	053-6205-583.50-48	PO NUM 052072		89.93	
							VENDOR TOTAL *		128.95	
0003091	00	DUTTON-LAINSON CO								
S14863-1		PI4416		00	07/01/2020	051-0000-154.00-00	PO NUM 053726		EFT:	920.20
819268-1		PI4417		00	07/01/2020	051-0000-154.00-00	PO NUM 053726		EFT:	187.14
820863-1		PI4423		00	07/01/2020	051-0000-154.00-00	PO NUM 053924		EFT:	1,002.60
S13092-1		PI4511		00	07/01/2020	051-0000-159.00-00	PO NUM 052940		EFT:	14,766.00
S14383-1		PI4725		00	07/01/2020	051-0000-154.00-00	PO NUM 052755		EFT:	1,061.33
819268-2		PI4726		00	07/01/2020	051-0000-154.00-00	PO NUM 053726		EFT:	436.67
821737-1		PI4732		00	07/01/2020	051-0000-154.00-00	PO NUM 054023		EFT:	893.67
							VENDOR TOTAL *		.00	19,267.61
9999999	00	EDEZA, JORGE								
000080627		UT		00	07/01/2020	051-0000-143.00-00	MANUAL CHECK		6.16	
							VENDOR TOTAL *		6.16	
0001091	00	EMANUEL PRINTING INC								
14472		PI4745		00	07/01/2020	053-6205-583.50-31	PO NUM 053836		175.07	
							VENDOR TOTAL *		175.07	
9999999	00	ENGEL, DALLAS E								
000079293		UT		00	07/01/2020	051-0000-143.00-00	MANUAL CHECK		150.58	
							VENDOR TOTAL *		150.58	
0004026	00	ENVIRONMENTAL ANALYSIS SOUTH INC								
156026		PI4476		00	07/01/2020	055-7105-502.60-54	PO NUM 053670		150.00	
156209		PI4525		00	07/01/2020	055-7105-502.60-54	PO NUM 053670		16.40	
156230		PI4526		00	07/01/2020	055-7105-502.60-54	PO NUM 053670		475.00	
							VENDOR TOTAL *		641.40	
9999999	00	ESCH, NANCY & STEVEN								
000073677		UT		00	07/01/2020	051-0000-143.00-00	MANUAL CHECK		1.94	

VEND NO / INVOICE NO	SEQ#	VENDOR NAME / VOUCHER NO	P.O. NO	BNK	CHECK/DUE DATE	ACCOUNT NO	ITEM DESCRIPTION	CHECK AMOUNT	EFT, EPAY OR HAND-ISSUED AMOUNT
9999999	00	ESCH, NANCY & STEVEN							
							VENDOR TOTAL *	1.94	
0002050	00	FASTENAL CO							
NEFRE175496		PI4464		00	07/01/2020	051-5001-940.50-35	PO NUM 052073	EFT:	30.67
							VENDOR TOTAL *	.00	30.67
0001729	00	FCX PERFORMANCE INC							
4581902		PI4556		00	07/01/2020	051-0000-153.00-00	PO NUM 053513	183.59	
4581454		PI4562		00	07/01/2020	051-0000-153.00-00	PO NUM 053970	1,145.84	
							VENDOR TOTAL *	1,329.43	
9999999	00	FINLEY, KEVIN J							
000075137		UT		00	07/01/2020	051-0000-143.00-00	MANUAL CHECK	82.31	
							VENDOR TOTAL *	82.31	
0005255	00	FIRST NATIONAL BANK OF OMAHA TRUST							
810005231/2014B		PI4538		00	07/01/2020	051-5001-928.02-00	PO NUM 053987	250.00	
810005231/2012		PI4539		00	07/01/2020	051-5001-928.02-00	PO NUM 053987	202.50	
810005231/2013		PI4541		00	07/01/2020	051-5001-928.02-00	PO NUM 053987	250.00	
810005231/2015		PI4543		00	07/01/2020	051-5001-928.02-00	PO NUM 053987	97.17	
810005231/2018		PI4548		00	07/01/2020	051-5001-928.02-00	PO NUM 053987	56.25	
810005231/2012		PI4540		00	07/01/2020	053-6001-928.02-00	PO# 053987	22.50	
810005231/2014		PI4542		00	07/01/2020	053-6001-928.02-00	PO NUM 053987	250.00	
810005231/2015		PI4544		00	07/01/2020	053-6001-928.02-00	PO# 053987	97.90	
810005231/2016		PI4546		00	07/01/2020	053-6001-928.02-00	PO NUM 053987	116.52	
810005231/2015		PI4545		00	07/01/2020	055-7001-928.02-00	PO# 053987	54.93	
810005231/2016		PI4547		00	07/01/2020	055-7001-928.02-00	PO# 053987	133.48	
810005231/2018		PI4549		00	07/01/2020	055-7001-928.02-00	PO# 053987	193.75	
							VENDOR TOTAL *	1,725.00	
9999999	00	FISCHER, ANTHONY E							
000075783		UT		00	07/01/2020	051-0000-143.00-00	MANUAL CHECK	64.30	
							VENDOR TOTAL *	64.30	
9999999	00	FRANK, CONNOR R							
000079063		UT		00	07/01/2020	051-0000-143.00-00	MANUAL CHECK	110.13	
							VENDOR TOTAL *	110.13	
0001112	00	FREMONT ELECTRIC INC							
44260		PI4577		00	07/01/2020	057-8205-870.60-61	PO NUM 053949	1,250.00	
							VENDOR TOTAL *	1,250.00	
0001131	00	FREMONT TRIBUNE							
913362-1		PI4517		00	07/01/2020	051-5001-926.60-78	PO NUM 052097	581.83	
919784		PI4518		00	07/01/2020	051-5001-926.60-78	PO NUM 052097	15.70	
							VENDOR TOTAL *	597.53	
0001132	00	FREMONT WINNELSON CO							
346992 01		PI4465		00	07/01/2020	051-5105-502.50-35	PO NUM 052074	227.96	

VEND NO / INVOICE NO	SEQ#	VENDOR NAME / VOUCHER NO	P.O. NO	BNK CHECK/DUE DATE	ACCOUNT NO	ITEM DESCRIPTION	CHECK AMOUNT	EFT, EPAY OR HAND-ISSUED AMOUNT
0001132	00	FREMONT WINNELSON CO						
347467 01		PI4612		00 07/01/2020	051-5205-580.50-35	PO NUM 052074	182.66	
347546 01		PI4613		00 07/01/2020	055-7105-502.50-35	PO NUM 052074	39.91	
						VENDOR TOTAL *	450.53	
0005211	00	GE STEAM POWER INC						
99412112		PI4475		00 07/01/2020	051-5105-502.60-79	PO NUM 053486	EFT:	182.12
						VENDOR TOTAL *	.00	182.12
0001139	00	GERHOLD CONCRETE CO INC						
154409		PI4752		00 07/01/2020	055-7105-502.50-35	PO NUM 053988	585.75	
						VENDOR TOTAL *	585.75	
0001143	00	GLASS HOUSE						
56643		PI4550		00 07/01/2020	051-5205-580.50-35	PO NUM 053991	20.83	
56643		PI4551		00 07/01/2020	051-5205-580.60-61	PO NUM 053991	85.00	
						VENDOR TOTAL *	105.83	
0001148	00	GOREE BACKHOE & EXCAVATING INC						
12764		PI4483		00 07/01/2020	051-5001-940.50-35	PO NUM 053932	1,577.82	
						VENDOR TOTAL *	1,577.82	
9999999	00	GRAFE-CLINE, TRAVIS						
000076979		UT		00 07/01/2020	051-0000-143.00-00	MANUAL CHECK	13.96	
						VENDOR TOTAL *	13.96	
0001742	00	GRAINGER						
9563116012		PI4690		00 07/01/2020	051-5105-502.50-35	PO NUM 054032	EFT:	19.60
						VENDOR TOTAL *	.00	19.60
0005207	00	GRANITE INDUSTRIES INC						
IN0111754		PI4631		00 07/01/2020	051-5105-502.50-35	PO NUM 053995	32.10	
IN0111754		PI4632		00 07/01/2020	051-5105-502.60-79	PO NUM 053995	21.40	
						VENDOR TOTAL *	53.50	
0001445	00	GRAYBAR ELECTRIC CO INC						
9316175063		PI4485		00 07/01/2020	051-5105-502.50-35	PO NUM 053943	EFT:	447.84
9316175063		PI4486		00 07/01/2020	051-5105-502.50-35	PO NUM 053943	EFT:	114.76
						VENDOR TOTAL *	.00	562.60
0004707	00	GREAT PLAINS COMMUNICATIONS INC						
9927040235	0620	PI4659		00 07/01/2020	051-5001-922.50-53	PO NUM 052213	163.00	
9927040235	0620	PI4660		00 07/01/2020	051-5001-922.60-65	PO NUM 052213	1,000.00	
						VENDOR TOTAL *	1,163.00	
0000602	00	GROEBNER & ASSOCIATES INC						
406020		PI4681		00 07/01/2020	057-8205-870.50-35	PO NUM 053808	EFT:	342.40
406020		PI4682		00 07/01/2020	057-8205-870.60-79	PO NUM 053808	EFT:	36.35
						VENDOR TOTAL *	.00	378.75
0003155	00	HACH COMPANY						

VEND NO / INVOICE NO	SEQ#	VENDOR NAME / VOUCHER NO	P.O. NO	BNK	CHECK/DUE DATE	ACCOUNT NO	ITEM DESCRIPTION	CHECK AMOUNT	EFT, EPAY OR HAND-ISSUED AMOUNT
0003155	00	HACH COMPANY							
11986344		PI4535		00	07/01/2020	051-5105-502.50-52	PO NUM 053972	532.50	
11986344		PI4536		00	07/01/2020	051-5105-502.60-79	PO NUM 053972	74.84	
11988809		PI4537		00	07/01/2020	051-5105-502.50-52	PO NUM 053972	70.90	
							VENDOR TOTAL *	678.24	
9999999	00	HALBERT, ZACKARY							
000079595		UT		00	07/01/2020	051-0000-143.00-00	MANUAL CHECK	175.21	
							VENDOR TOTAL *	175.21	
9999999	00	HAMPTON, JETTRE S							
000078419		UT		00	07/01/2020	051-0000-143.00-00	MANUAL CHECK	.63	
							VENDOR TOTAL *	.63	
0004419	00	HANSEN TIRE LLC							
28334		PI4567		00	07/01/2020	051-5105-502.50-48	PO NUM 052076	4.22	
28334		PI4568		00	07/01/2020	051-5105-502.60-59	PO NUM 052076	40.00	
28320		PI4566		00	07/01/2020	051-5205-580.60-59	PO NUM 052076	16.00	
28335		PI4569		00	07/01/2020	053-6205-583.50-48	PO NUM 052076	4.22	
28335		PI4570		00	07/01/2020	053-6205-583.60-59	PO NUM 052076	40.00	
28409		PI4720		00	07/01/2020	055-7205-583.50-48	PO NUM 054051	2,940.81	
28409		PI4721		00	07/01/2020	055-7205-583.60-59	PO NUM 054051	2,215.00	
28409		PI4722		00	07/01/2020	055-7205-583.60-79	PO NUM 054051	20.00	
							VENDOR TOTAL *	5,280.25	
0002847	00	HARCROS CHEMICALS INC							
050118071		PI4555		00	07/01/2020	051-0000-154.00-00	PO NUM 053494	1,205.17	
							VENDOR TOTAL *	1,205.17	
0004469	00	HAYES MECHANICAL							
458305		PI4573		00	07/01/2020	051-5105-502.60-61	PO NUM 053551	2,143.19	
458628		PI4646		00	07/01/2020	051-5105-502.60-61	PO NUM 053927	1,602.00	
							VENDOR TOTAL *	3,745.19	
0002794	00	HDR ENGINEERING INC							
1200270473		PI4463		00	07/01/2020	051-5105-502.60-61	PO NUM 051910	EFT:	7,449.30
1200273103		PI4564		00	07/01/2020	055-7105-502.60-61	PO NUM 044217 Engineering for WWTP improvements	EFT:	73,441.71
							VENDOR TOTAL *	.00	80,891.01
0002341	00	HEATH CONSULTANTS INC							
1064935		PI4685		00	07/01/2020	057-8205-870.60-61	PO NUM 053964	401.25	
1064935		PI4686		00	07/01/2020	057-8205-870.60-79	PO NUM 053964	41.25	
							VENDOR TOTAL *	442.50	
0001686	00	HOSE & HANDLING INC							
00151336		PI4635		00	07/01/2020	055-7205-583.50-35	PO NUM 054010	605.45	
							VENDOR TOTAL *	605.45	
0004062	00	HOUSTON & ASSOCIATES LLC							
436		PI4621		00	07/01/2020	057-8205-870.60-61	PO NUM 052314	EFT:	2,500.00

VEND NO / INVOICE NO	SEQ#	VENDOR NAME / VOUCHER NO	P.O. NO	BNK	CHECK/DUE DATE	ACCOUNT NO	ITEM DESCRIPTION	CHECK AMOUNT	EFT, EPAY OR HAND-ISSUED AMOUNT
0004062	00	HOUSTON & ASSOCIATES LLC							
							VENDOR TOTAL *	.00	2,500.00
0001646	00	HTM SALES INC							
20-38866-1		PI4474		00	07/01/2020	055-7205-583.50-35	PO NUM 053416	EFT:	8,543.00
							VENDOR TOTAL *	.00	8,543.00
0004188	00	HUNTEL COMMUNICATIONS							
236764		PI4478		00	07/01/2020	051-5001-922.60-65	PO NUM 053868	1,200.00	
							VENDOR TOTAL *	1,200.00	
0003878	00	HUPP ELECTRIC MOTORS INC							
297869		PI4729		00	07/01/2020	051-0000-153.00-00	PO NUM 053956	2,806.37	
							VENDOR TOTAL *	2,806.37	
0002556	00	ICMA							
439877 2020		PI4664		00	07/01/2020	051-5001-903.60-67	PO NUM 054041	200.00	
							VENDOR TOTAL *	200.00	
0005279	00	INDRA MOWING LLC							
5195		PI4719		00	07/01/2020	053-6205-583.60-61	PO NUM 054047	256.80	
							VENDOR TOTAL *	256.80	
0001833	00	INDUSTRIAL SALES CO INC							
1060669-000		PI4454		00	07/01/2020	057-0000-154.00-00	PO NUM 053427	624.03	
							VENDOR TOTAL *	624.03	
9999999	00	INNOTION ENTERPRISES, INC							
000079811		UT		00	07/01/2020	051-0000-143.00-00	MANUAL CHECK	162.63	
							VENDOR TOTAL *	162.63	
0003483	00	INTERSTATE CHEMICAL CO INC							
418974		PI4473		00	07/01/2020	051-5105-502.50-52	PO NUM 052576	4,193.03	
							VENDOR TOTAL *	4,193.03	
0003966	00	INTL PUBLIC MANAGEMENT ASSN FOR HR							
INV54895D2K2K6		PI4624		00	07/01/2020	051-5001-926.60-61	PO NUM 053713	161.00	
							VENDOR TOTAL *	161.00	
9999999	00	JAHN, DANIEL R							
000077443		UT		00	07/01/2020	051-0000-143.00-00	MANUAL CHECK	151.24	
							VENDOR TOTAL *	151.24	
0005187	00	JC CROSS COMPANY							
60322		PI4460		00	07/01/2020	051-0000-153.00-00	PO NUM 053841	597.36	
							VENDOR TOTAL *	597.36	
0004205	00	JCI INDUSTRIES INC							
8196056		PI4457		00	07/01/2020	051-0000-153.00-00	PO NUM 053777	56.69	
8196110		PI4458		00	07/01/2020	051-0000-153.00-00	PO NUM 053777	157.36	

VEND NO / INVOICE NO	SEQ#	VENDOR NAME / VOUCHER NO	P.O. NO	BNK	CHECK/DUE DATE	ACCOUNT NO	ITEM DESCRIPTION	CHECK AMOUNT	EFT, EPAY OR HAND-ISSUED AMOUNT
0004205	00	JCI INDUSTRIES INC							
8196461		PI4459		00	07/01/2020	051-0000-153.00-00	PO NUM 053777	85.21	
8196817		PI4608		00	07/01/2020	051-0000-153.00-00	PO NUM 053777	1,151.66	
							VENDOR TOTAL *	1,450.92	
0000614	00	JERRY'S ELECTRIC INC							
L06-009-2020		PI4618		00	07/01/2020	051-5205-580.60-61	PO NUM 052177	37.50	
							VENDOR TOTAL *	37.50	
9999999	00	JESSEN, RACHEL A							
000079283		UT		00	07/01/2020	051-0000-143.00-00	MANUAL CHECK	116.40	
							VENDOR TOTAL *	116.40	
0003085	00	KELLY SUPPLY CO							
S11129056-0		PI4558		00	07/01/2020	051-0000-153.00-00	PO NUM 053881	EFT:	771.94
S11129062-0		PI4559		00	07/01/2020	051-0000-153.00-00	PO NUM 053918	EFT:	1,671.94
S11129057-0		PI4749		00	07/01/2020	051-5105-502.50-35	PO NUM 053920	EFT:	1,432.10
							VENDOR TOTAL *	.00	3,875.98
9999999	00	KESSEL, MADILYN							
000078717		UT		00	07/01/2020	051-0000-143.00-00	MANUAL CHECK	142.41	
							VENDOR TOTAL *	142.41	
0004708	00	KIMBALL MIDWEST							
8007390		PI4634		00	07/01/2020	051-5001-940.50-35	PO NUM 054008	271.09	
							VENDOR TOTAL *	271.09	
9999999	00	KOHLS, TRACI L							
000079103		UT		00	07/01/2020	051-0000-143.00-00	MANUAL CHECK	174.59	
							VENDOR TOTAL *	174.59	
0005001	00	KOONS GAS MEASUREMENT							
34093		PI4456		00	07/01/2020	057-0000-154.00-00	PO NUM 053751	16,542.20	
							VENDOR TOTAL *	16,542.20	
9999999	00	KORMAN, ALEX C							
000074663		UT		00	07/01/2020	051-0000-143.00-00	MANUAL CHECK	8.13	
							VENDOR TOTAL *	8.13	
0005194	00	KPE ENGINEERS ARCHITECTS FORENSIC							
6977		PI4462		00	07/01/2020	051-5001-950.80-50	PO NUM 050920	453.13	
							VENDOR TOTAL *	453.13	
0004967	00	KUBOTA OF OMAHA							
CO122800		PI4630		00	07/01/2020	055-7105-502.50-35	PO NUM 053989	119.28	
							VENDOR TOTAL *	119.28	
9999999	00	LACKEY, SAMANTHA L							
000077879		UT		00	07/01/2020	051-0000-143.00-00	MANUAL CHECK	103.80	
							VENDOR TOTAL *	103.80	
0002654	00	LEAGUE ASSN OF RISK MANAGEMENT							

VEND NO / INVOICE NO	SEQ#	VENDOR NAME / VOUCHER NO	P.O. NO	BNK	CHECK/DUE DATE	ACCOUNT NO	ITEM DESCRIPTION	CHECK AMOUNT	EFT, EPAY OR HAND-ISSUED AMOUNT
0002654	00	LEAGUE ASSN OF RISK MANAGEMENT							
106545881-2020		PI4487		00	07/01/2020	051-5001-919.60-63	PO NUM 053978	1,029.00	
106545881-2020		PI4488		00	07/01/2020	051-5001-919.60-63	PO NUM 053978	1,029.00	
							VENDOR TOTAL *	2,058.00	
0003043	00	LEAGUE OF NE MUNICIP-UTILITIES SECT							
7752		PI4606		00	07/01/2020	051-5205-580.60-62	PO NUM 054001	11,135.00	
							VENDOR TOTAL *	11,135.00	
0004975	00	LEAGUE OF NEBRASKA MUNICIPALITIES							
2020 SANDERS J		PI4665		00	07/01/2020	051-5001-920.60-62	PO NUM 054044	325.00	
							VENDOR TOTAL *	325.00	
0004601	00	LINCOLN WINWATER WORKS CO							
069646 01		PI4603		00	07/01/2020	053-6205-583.50-35	PO NUM 053977	221.54	
							VENDOR TOTAL *	221.54	
0004712	00	LOU'S GLOVES INC							
036125		PI4633		00	07/01/2020	055-7105-502.50-35	PO NUM 054003	486.00	
							VENDOR TOTAL *	486.00	
9999999	00	LOUNSBURY, CYDNEY J							
000077091		UT		00	07/01/2020	051-0000-143.00-00	MANUAL CHECK	97.80	
							VENDOR TOTAL *	97.80	
0002945	00	LYMAN RICHEY SAND & GRAVEL							
150804		PI4587		00	07/01/2020	053-6205-583.50-35	PO NUM 052081	99.49	
151555		PI4615		00	07/01/2020	053-6205-583.50-35	PO NUM 052081	111.60	
							VENDOR TOTAL *	211.09	
0000480	00	MALLOY ELECTRIC							
6299536		PI4661		00	07/01/2020	051-5105-502.60-59	PO NUM 053787	4,732.73	
							VENDOR TOTAL *	4,732.73	
0002052	00	MATHESON LINWELD							
51647773		PI4466		00	07/01/2020	051-5001-940.60-76	PO NUM 052080	EFT:	86.57
21809714		PI4472		00	07/01/2020	051-5105-502.50-35	PO NUM 052499	EFT:	466.36
21800415		PI4585		00	07/01/2020	051-5105-502.50-35	PO NUM 052080	EFT:	10.54
21800444		PI4586		00	07/01/2020	051-5105-502.50-35	PO NUM 052080	EFT:	104.67
21818880		PI4614		00	07/01/2020	051-5105-502.50-35	PO NUM 052080	EFT:	78.77
21833512		PI4622		00	07/01/2020	051-5105-502.50-35	PO NUM 052499	EFT:	324.42
21857199		PI4739		00	07/01/2020	051-5105-502.50-35	PO NUM 052499	EFT:	324.42
51647773		PI4467		00	07/01/2020	051-5205-580.60-76	PO NUM 052080	EFT:	126.05
51647773		PI4468		00	07/01/2020	057-8205-870.60-76	PO NUM 052080	EFT:	68.72
							VENDOR TOTAL *	.00	1,590.52
0003289	00	MATT FRIEND TRUCK EQUIPMENT INC							
0088218-IN		PI4628		00	07/01/2020	051-5001-940.50-35	PO NUM 053944	785.48	
0088218-IN		PI4629		00	07/01/2020	051-5001-940.60-79	PO NUM 053944	26.60	
							VENDOR TOTAL *	812.08	
0000667	00	MCMASTER-CARR SUPPLY CO							

VEND NO / INVOICE NO	SEQ#	VENDOR NAME / VOUCHER NO	P.O. NO	BNK	CHECK/DUE DATE	ACCOUNT NO	ITEM DESCRIPTION	CHECK AMOUNT	EFT, EPAY OR HAND-ISSUED AMOUNT
0000667	00	MCMASTER-CARR SUPPLY CO							
39988302		PI4479		00	07/01/2020	051-5105-502.50-35	PO NUM 053876	272.11	
39988302		PI4480		00	07/01/2020	051-5105-502.50-35	PO NUM 053876	26.74	
39988302		PI4481		00	07/01/2020	051-5105-502.60-79	PO NUM 053876	29.44	
41073409		PI4753		00	07/01/2020	051-5105-502.50-35	PO NUM 054031	135.57	
41073409		PI4754		00	07/01/2020	051-5105-502.60-79	PO NUM 054031	24.35	
							VENDOR TOTAL *	488.21	
0005201	00	MEDEXPRESS URGENT CARE NEBRASKA INC							
1559854C3908		PI4657		00	07/01/2020	051-5001-926.60-61	PO NUM 052113	98.00	
1562716C3908		PI4658		00	07/01/2020	051-5001-926.60-61	PO NUM 052113	98.00	
							VENDOR TOTAL *	196.00	
0001555	00	MELLEN & ASSOCIATES INC							
25193		PI4626		00	07/01/2020	053-6205-583.50-35	PO NUM 053834	EFT:	1,807.85
25193		PI4627		00	07/01/2020	053-6205-583.60-79	PO NUM 053834	EFT:	106.17
							VENDOR TOTAL *	.00	1,914.02
0001229	00	MENARDS - FREMONT							
93599		PI4588		00	07/01/2020	051-5001-940.50-35	PO NUM 052083	101.46	
93992		PI4640		00	07/01/2020	051-5001-922.50-42	PO NUM 052083	13.66	
94026		PI4669		00	07/01/2020	051-5001-940.50-35	PO NUM 052083	155.79	
94107		PI4702		00	07/01/2020	051-5001-940.50-35	PO NUM 052083	80.96	
94177		PI4703		00	07/01/2020	051-5001-940.50-35	PO NUM 052083	219.82	
93648		PI4589		00	07/01/2020	051-5105-502.50-35	PO NUM 052083	139.58	
93336		PI4597		00	07/01/2020	051-5105-502.50-35	PO NUM 053945	2,041.62	
93336		PI4598		00	07/01/2020	051-5105-502.60-79	PO NUM 053945	84.53	
93738		PI4616		00	07/01/2020	051-5105-502.50-35	PO NUM 052083	243.99	
93739		PI4617		00	07/01/2020	051-5105-502.50-35	PO NUM 052083	195.53	
94245		PI4737		00	07/01/2020	051-5105-502.50-35	PO NUM 052083	284.37	
93206		PI4469		00	07/01/2020	051-5205-580.50-35	PO NUM 052083	22.99	
93439		PI4470		00	07/01/2020	055-7105-502.50-35	PO NUM 052083	96.46	
							VENDOR TOTAL *	3,680.76	
0005165	01	METHODIST FREMONT HEALTH							
IN1368/4031		PI4655		00	07/01/2020	051-5001-926.60-61	PO NUM 052109	200.00	
IN1390/4021		PI4656		00	07/01/2020	051-5001-926.60-61	PO NUM 052109	180.00	
							VENDOR TOTAL *	380.00	
0002960	00	MIDLAND SCIENTIFIC INC							
6107530		PI4687		00	07/01/2020	055-7105-502.50-35	PO NUM 054002	49.48	
6107530		PI4688		00	07/01/2020	055-7105-502.50-52	PO NUM 054002	365.82	
6107551		PI4689		00	07/01/2020	055-7105-502.50-52	PO NUM 054002	52.26	
							VENDOR TOTAL *	467.56	
0003008	00	MIDWEST LABORATORIES INC							
995435		PI4471		00	07/01/2020	055-7105-502.60-54	PO NUM 052084	470.00	
							VENDOR TOTAL *	470.00	
0005238	00	MIDWEST PETROLEUM EQUIPMENT LLC							

VEND NO / INVOICE NO	SEQ#	VENDOR NAME / VOUCHER NO	P.O. NO	BNK	CHECK/DUE DATE	ACCOUNT NO	ITEM DESCRIPTION	CHECK AMOUNT	EFT, EPAY OR HAND-ISSUED AMOUNT
0005238	00	MIDWEST PETROLEUM EQUIPMENT LLC							
12730		PI4723		00	07/01/2020	051-5001-940.50-35	PO NUM 054054	480.89	
12730		PI4724		00	07/01/2020	051-5001-940.60-61	PO NUM 054054	357.50	
							VENDOR TOTAL *	838.39	
0002985	00	MSC INDUSTRIAL SUPPLY CO INC							
51568862		PI4455		00	07/01/2020	051-0000-154.00-00	PO NUM 053571	EFT:	9,737.00
55031712		PI4461		00	07/01/2020	051-0000-154.00-00	PO NUM 053866	EFT:	71.55
57616962		PI4583		00	07/01/2020	051-0000-154.00-00	PO NUM 053953	EFT:	239.94
58797972		PI4584		00	07/01/2020	051-0000-154.00-00	PO NUM 054000	EFT:	32.74
61723212		PI4728		00	07/01/2020	051-0000-155.00-00	PO NUM 053947	EFT:	355.22
61294672		PI4756		00	07/01/2020	051-0000-154.00-00	PO NUM 054048	EFT:	875.82
56122732		PI4591		00	07/01/2020	051-5001-940.50-35	PO NUM 053569	EFT:	437.27
58305782		PI4592		00	07/01/2020	051-5001-940.50-35	PO NUM 053569	EFT:	437.27
57616962		PI4601		00	07/01/2020	051-5001-940.50-35	PO NUM 053953	EFT:	595.37
57675702		PI4602		00	07/01/2020	051-5001-940.50-35	PO NUM 053969	EFT:	67.34
58797972		PI4605		00	07/01/2020	051-5001-940.50-35	PO NUM 054000	EFT:	27.05
56232622		PI4477		00	07/01/2020	051-5105-502.50-35	PO NUM 053764	EFT:	9.84
55974942		PI4482		00	07/01/2020	051-5105-502.50-35	PO NUM 053926	EFT:	120.33
56558522		PI4484		00	07/01/2020	051-5105-502.50-35	PO NUM 053940	EFT:	129.51
61110372		PI4714		00	07/01/2020	051-5105-502.50-35	PO NUM 053904	EFT:	517.60
60656742		PI4746		00	07/01/2020	051-5105-502.50-35	PO NUM 053903	EFT:	113.59
61363562		PI4750		00	07/01/2020	051-5105-502.50-35	PO NUM 053947	EFT:	341.54
61363562		PI4751		00	07/01/2020	051-5105-502.60-79	PO NUM 053947	EFT:	76.76
							VENDOR TOTAL *	.00	14,185.74
0005004	00	NALCO COMPANY LLC							
86867553		PI4643		00	07/01/2020	055-7105-502.60-59	PO NUM 053133	400.02	
							VENDOR TOTAL *	400.02	
0005010	00	NATIONAL FILTER MEDIA CORPORATION							
MS543756		PI4489		00	07/01/2020	051-0000-153.00-00	PO NUM 053384	679.92	
							VENDOR TOTAL *	679.92	
0005235	00	NAVAJO TRANSITIONAL ENERGY CO*WIRE*							
ACC-20-0378				00	07/01/2020	051-0000-152.00-00	6/14/20	212,937.17	Coal purchase
							VENDOR TOTAL *	212,937.17	
0003053	00	NEBRASKA HEALTH & HUMAN SERV-LIHEAP							
000049251		UT		00	07/01/2020	051-0000-143.00-00	Energy Assistance Refund	261.55	
000070087		UT		00	07/01/2020	051-0000-143.00-00	Energy Assistance Refund	473.32	
060420				00	07/01/2020	051-5001-421.00-00	Energy Assistance Refund	335.00	
							VENDOR TOTAL *	1,069.87	
0003428	00	NEW PIG CORPORATION							
23053951-00		PI4505		00	07/01/2020	051-5105-502.50-35	PO NUM 053909	515.94	
23053951-00		PI4506		00	07/01/2020	051-5105-502.60-79	PO NUM 053909	59.72	
							VENDOR TOTAL *	575.66	
9999999	00	NORTON, JOSHUA K							

VEND NO / INVOICE NO	SEQ#	VENDOR NAME / VOUCHER NO	P.O. NO	BNK	CHECK/DUE DATE	ACCOUNT NO	ITEM DESCRIPTION	CHECK AMOUNT	EFT, EPAY OR HAND-ISSUED AMOUNT
9999999	00	NORTON, JOSHUA K							
000075427		UT		00	07/01/2020	051-0000-143.00-00	MANUAL CHECK	116.39	
							VENDOR TOTAL *	116.39	
9999999	00	O'HAVER, NICOLE D							
000077619		UT		00	07/01/2020	051-0000-143.00-00	MANUAL CHECK	91.46	
							VENDOR TOTAL *	91.46	
0001020	00	O'REILLY AUTOMOTIVE INC							
0397-331454		PI4704		00	07/01/2020	051-5001-940.50-35	PO NUM 052085	73.25	
0397-331756		PI4738		00	07/01/2020	051-5105-502.50-35	PO NUM 052085	80.23	
							VENDOR TOTAL *	153.48	
0002888	00	OFFICENET							
941545-0		PI4594		00	07/01/2020	051-5001-920.50-40	PO NUM 053921	64.85	
941545-0		PI4595		00	07/01/2020	051-5001-920.50-61	PO NUM 053921	105.61	
941545-0		PI4596		00	07/01/2020	051-5001-922.50-40	PO NUM 053921	113.40	
							VENDOR TOTAL *	283.86	
0004910	00	OHIO LUMEX CO INC							
COF052920A		PI4494		00	07/01/2020	051-5105-502.60-61	PO NUM 052204	450.00	
							VENDOR TOTAL *	450.00	
0002946	00	OMAHA PUBLIC POWER DISTRICT							
7281943133	0620	PI4642		00	07/01/2020	055-7105-502.60-71	PO NUM 052424	EFT:	33.76
0128000051	0620	PI4641		00	07/01/2020	057-8205-870.60-61	PO NUM 052176	EFT:	54.46
							VENDOR TOTAL *	.00	88.22
9999999	00	OQUIST, AARON R							
000080165		UT		00	07/01/2020	051-0000-143.00-00	MANUAL CHECK	166.28	
							VENDOR TOTAL *	166.28	
0005257	00	PAPER TIGER SHREDDING INC							
129535		PI4590		00	07/01/2020	051-5001-932.60-61	PO NUM 053318	58.00	
							VENDOR TOTAL *	58.00	
0004800	00	PINNACLE BANK - VISA							
06052020		PI4600		00	07/01/2020	051-5205-580.60-61	PO NUM 053951	40.00	
							VENDOR TOTAL *	40.00	
0002622	00	PITNEY BOWES INC							
1015800348		PI4651		00	07/01/2020	051-5001-903.60-65	PO NUM 054027	150.00	
							VENDOR TOTAL *	150.00	
0002919	00	PLATTE VALLEY EQUIPMENT LLC							
2394980		PI4509		00	07/01/2020	051-5105-502.50-48	PO NUM 053960	123.29	
2394980		PI4510		00	07/01/2020	051-5105-502.60-59	PO NUM 053960	712.12	
							VENDOR TOTAL *	835.41	
0005265	00	PORT-A-JOHNS							

VEND NO / INVOICE NO	SEQ#	VENDOR NAME / VOUCHER NO	P.O. NO	BNK	CHECK/DUE DATE	ACCOUNT NO	ITEM DESCRIPTION	CHECK AMOUNT	EFT, EPAY OR HAND-ISSUED AMOUNT
0005265	00	PORT-A-JOHNS							
20-1360		PI4498		00	07/01/2020	051-5105-502.60-76	PO NUM 053401	342.40	
							VENDOR TOTAL *	342.40	
0005274	00	PRECISION MEASUREMENTS INC							
40129872		PI4582		00	07/01/2020	051-0000-153.00-00	PO NUM 053885	665.03	
							VENDOR TOTAL *	665.03	
0004740	00	PREMIER STAFFING INC							
14899		PI4492		00	07/01/2020	051-5001-926.60-61	PO NUM 052099	80.00	
14902		PI4493		00	07/01/2020	051-5001-926.60-61	PO NUM 052099	40.00	
14957		PI4653		00	07/01/2020	051-5001-926.60-61	PO NUM 052099	600.00	
14958		PI4654		00	07/01/2020	051-5001-926.60-61	PO NUM 052099	80.00	
							VENDOR TOTAL *	800.00	
0004696	00	PRIME COMMUNICATIONS INC							
60666		PI4683		00	07/01/2020	051-5001-922.60-65	PO NUM 053938	599.20	
60666		PI4684		00	07/01/2020	051-5001-950.80-50	PO NUM 053938	10,139.86	
							VENDOR TOTAL *	10,739.06	
0005210	00	R.P. ADAMS							
3180152		PI4499		00	07/01/2020	051-5105-502.50-35	PO NUM 053626	4,247.00	
3180152		PI4500		00	07/01/2020	051-5105-502.60-79	PO NUM 053626	100.00	
							VENDOR TOTAL *	4,347.00	
0004413	00	RADWELL INTERNATIONAL INC							
31419587		PI4501		00	07/01/2020	055-7105-502.60-59	PO NUM 053867	333.67	
31425703		PI4502		00	07/01/2020	055-7105-502.60-59	PO NUM 053867	1,145.00	
31450604		PI4759		00	07/01/2020	055-7105-502.50-35	PO NUM 054053	2,507.50	
							VENDOR TOTAL *	3,986.17	
0005035	00	RAILWORKS TRACK SYSTEMS INC							
183571		PI4647		00	07/01/2020	051-5105-502.60-58	PO NUM 053929	158,816.00	Progress payments on
183991		PI4715		00	07/01/2020	051-5105-502.60-58	PO NUM 053929	158,823.00	RAIL TRACK EXTENSION CCR 2020-058
							VENDOR TOTAL *	317,639.00	
0005076	00	RASMUSSEN AIR & GAS ENERGY INC							
20749		PI4650		00	07/01/2020	055-7105-502.50-35	PO NUM 054012	274.00	
							VENDOR TOTAL *	274.00	
0002876	00	RAWHIDE CHEMOIL INC							
19023		PI4607		00	07/01/2020	051-5001-940.50-30	PO NUM 054015	13,081.31	
200404		PI4718		00	07/01/2020	051-5105-502.50-30	PO NUM 054042	186.73	
							VENDOR TOTAL *	13,268.04	
9999999	00	REESON, BROOKE E							
000073009		UT		00	07/01/2020	051-0000-143.00-00	MANUAL CHECK	149.17	
							VENDOR TOTAL *	149.17	
0004939	00	RESCO							

VEND NO / INVOICE NO	SEQ#	VENDOR NAME / VOUCHER NO	P.O. NO	BNK	CHECK/DUE DATE	ACCOUNT NO	ITEM DESCRIPTION	CHECK AMOUNT	EFT, EPAY OR HAND-ISSUED AMOUNT
0004939	00	RESCO							
789481-00		PI4667		00	07/01/2020	051-0000-154.00-00	PO NUM 054024	4,859.94	
							VENDOR TOTAL *	4,859.94	
0003790	00	RIEKES EQUIPMENT CO							
PSO017787-1		PI4691		00	07/01/2020	051-5205-580.50-35	PO NUM 054043	EFT:	256.80
							VENDOR TOTAL *	.00	256.80
9999999	00	RIFF RAFF RELICS							
000079887		UT		00	07/01/2020	051-0000-143.00-00	MANUAL CHECK	395.79	
							VENDOR TOTAL *	395.79	
9999999	00	S & SONS INC							
000076393		UT		00	07/01/2020	051-0000-143.00-00	MANUAL CHECK	124.28	
							VENDOR TOTAL *	124.28	
0000663	00	SAFETY-KLEEN SYSTEMS INC							
83273276		PI4755		00	07/01/2020	051-5105-502.60-61	PO NUM 054068	EFT:	329.65
							VENDOR TOTAL *	.00	329.65
0004639	00	SAPP BROS INC							
IN3140729		PI4604		00	07/01/2020	055-7105-502.50-30	PO NUM 053996	214.92	
							VENDOR TOTAL *	214.92	
0004326	00	SCHIMBERG CO							
2245486-00		PI4727		00	07/01/2020	051-0000-153.00-00	PO NUM 053884	35.43	
							VENDOR TOTAL *	35.43	
0005128	00	SCHLOSSER ENTERPRISES INC							
CLIP12069		PI4708		00	07/01/2020	051-5001-932.60-61	PO NUM 053492	EFT:	135.00
CLIP12069		PI4709		00	07/01/2020	051-5001-940.60-61	PO NUM 053492	EFT:	120.00
CLIP12069		PI4710		00	07/01/2020	051-5105-502.60-61	PO NUM 053492	EFT:	390.00
CLIP12069		PI4711		00	07/01/2020	053-6105-502.60-61	PO NUM 053492	EFT:	540.00
CLIP12069		PI4712		00	07/01/2020	055-7205-583.60-61	PO NUM 053492	EFT:	315.00
CLIP12069		PI4713		00	07/01/2020	057-8205-870.60-61	PO NUM 053492	EFT:	60.00
							VENDOR TOTAL *	.00	1,560.00
0003575	00	SCHWEITZER ENGINEERING LABS INC							
INV-000492621		PI4504		00	07/01/2020	051-5205-580.50-35	PO NUM 053875	EFT:	141.24
							VENDOR TOTAL *	.00	141.24
0003036	00	SHAFFER COMMUNICATIONS INC							
20-0898		PI4644		00	07/01/2020	051-5105-502.50-35	PO NUM 053925	580.66	
20-0898		PI4645		00	07/01/2020	051-5105-502.60-79	PO NUM 053925	21.22	
							VENDOR TOTAL *	601.88	
0000429	00	SKARSHAUG TESTING LABORATORY INC							
244508		PI4636		00	07/01/2020	051-0000-154.00-00	PO NUM 053968	961.58	
244527		PI4670		00	07/01/2020	051-5205-580.60-61	PO NUM 052102	456.45	
244527		PI4671		00	07/01/2020	051-5205-580.60-79	PO NUM 052102	248.25	

VEND NO / INVOICE NO	SEQ#	VENDOR NAME / VOUCHER NO	P.O. NO	BNK	CHECK/DUE DATE	ACCOUNT NO	ITEM DESCRIPTION	CHECK AMOUNT	EFT, EPAY OR HAND-ISSUED AMOUNT
0000429	00	SKARSHAUG TESTING LABORATORY INC							
							VENDOR TOTAL *	1,666.28	
0004955	00	SOUTHERN FIELD MAINTENANCE &							
SIV101108		PI4581		00	07/01/2020	051-0000-153.00-00	PO NUM 053197	6,093.84	
							VENDOR TOTAL *	6,093.84	
9999999	00	SPANGLER, CORTNEY N							
000079951		UT		00	07/01/2020	051-0000-143.00-00	MANUAL CHECK	339.05	
							VENDOR TOTAL *	339.05	
9999999	00	SPEER, LAURA M							
000076919		UT		00	07/01/2020	051-0000-143.00-00	MANUAL CHECK	13.40	
							VENDOR TOTAL *	13.40	
0003923	00	STATE OF NEBRASKA - CELLULAR							
1224680				00	07/01/2020	051-5001-903.50-53	Cellular	EFT:	73.60
1224680				00	07/01/2020	051-5001-919.50-53	Cellular	EFT:	51.66
1224680				00	07/01/2020	051-5001-922.50-53	Cellular	EFT:	98.08
1224680				00	07/01/2020	051-5001-925.50-53	Cellular	EFT:	51.66
1224680				00	07/01/2020	051-5001-926.50-53	Cellular	EFT:	51.66
1224680				00	07/01/2020	051-5105-502.50-53	Cellular	EFT:	155.58
1224680				00	07/01/2020	051-5205-580.50-53	Engineers Cellular	EFT:	190.59
1224680				00	07/01/2020	051-5205-580.50-53	Elect Distr Cellular	EFT:	353.00
1224680				00	07/01/2020	053-6105-502.50-53	Cellular	EFT:	51.66
1224680				00	07/01/2020	053-6205-583.50-53	Cellular	EFT:	191.38
1224680				00	07/01/2020	055-7105-502.50-53	Cellular	EFT:	28.77
1224680				00	07/01/2020	057-8205-870.50-53	Cellular	EFT:	290.32
							VENDOR TOTAL *	.00	1,587.96
0005200	00	STERLING COMPUTERS CORP							
0074547		PI4648		00	07/01/2020	051-5001-922.50-42	PO NUM 053965	229.20	
							VENDOR TOTAL *	229.20	
9999999	00	STEWART, SHAWN R							
000036735		UT		00	07/01/2020	051-0000-143.00-00	MANUAL CHECK	7.23	
							VENDOR TOTAL *	7.23	
9999999	00	STRUDTHOFF, SANDRA J							
000077169		UT		00	07/01/2020	051-0000-143.00-00	MANUAL CHECK	37.67	
							VENDOR TOTAL *	37.67	
0004344	00	THIELSCH ENGINEERING INC							
215916		PI4495		00	07/01/2020	051-5105-502.60-59	PO NUM 052597	1,500.00	
216043		PI4740		00	07/01/2020	051-5105-502.60-59	PO NUM 052597	2,000.00	
							VENDOR TOTAL *	3,500.00	
9999999	00	THRONTVEIT, SHELBY L							
000079335		UT		00	07/01/2020	051-0000-143.00-00	MANUAL CHECK	7.54	
							VENDOR TOTAL *	7.54	
9999999	00	TIEKEN, JORDAN L							

VEND NO / INVOICE NO	SEQ#	VENDOR NAME / VOUCHER NO	P.O. NO	BNK	CHECK/DUE DATE	ACCOUNT NO	ITEM DESCRIPTION	CHECK AMOUNT	EFT, EPAY OR HAND-ISSUED AMOUNT
9999999	00	TIEKEN, JORDAN L							
000079129		UT		00	07/01/2020	051-0000-143.00-00	MANUAL CHECK	130.38	
							VENDOR TOTAL *	130.38	
0005214	00	TRESCAL INC							
763692-99		PI4744		00	07/01/2020	051-5105-502.60-61	PO NUM 053655	181.99	
							VENDOR TOTAL *	181.99	
0004415	00	TRINITY CONSULTANTS INC							
1257385		PI4677		00	07/01/2020	051-5105-502.60-57	PO NUM 053089	4,646.25	
							VENDOR TOTAL *	4,646.25	
0003478	00	ULINE							
120465141		PI4507		00	07/01/2020	051-5001-940.50-35	PO NUM 053922	522.80	
120465141		PI4508		00	07/01/2020	051-5001-940.60-79	PO NUM 053922	69.70	
							VENDOR TOTAL *	592.50	
0001914	00	UNION PACIFIC RAILROAD							
307359225				00	07/01/2020	051-0000-152.00-00	6/14/20 Freight on coal train	EFT:	301,193.54
							VENDOR TOTAL *	.00	301,193.54
0000647	00	USABLUEBOOK							
264605		PI4747		00	07/01/2020	051-5105-502.50-35	PO NUM 053910	331.28	
264605		PI4748		00	07/01/2020	051-5105-502.60-79	PO NUM 053910	12.69	
							VENDOR TOTAL *	343.97	
0000525	00	UTILITY EQUIPMENT CO							
40057654-000		PI4490		00	07/01/2020	053-0000-154.00-00	PO NUM 053886	1,477.02	
40057650-000		PI4503		00	07/01/2020	053-6205-583.50-35	PO NUM 053873	207.00	
							VENDOR TOTAL *	1,684.02	
0004172	00	UTILITY SAFETY AND DESIGN INC							
IN20202016		PI4757		00	07/01/2020	057-8205-870.60-61	PO NUM 046013	162.00	
							VENDOR TOTAL *	162.00	
9999999	00	VONSEGGERN, TRAVIS D.							
000064183		UT		00	07/01/2020	051-0000-143.00-00	MANUAL CHECK	81.49	
							VENDOR TOTAL *	81.49	
0003064	00	VOSS LIGHTING							
11109416-00		PI4638		00	07/01/2020	051-0000-154.00-00	PO NUM 053984	174.63	
							VENDOR TOTAL *	174.63	
0004336	00	WATERLINK INC							
27832		PI4496		00	07/01/2020	051-5105-502.50-52	PO NUM 052845	1,308.83	
27832		PI4497		00	07/01/2020	051-5105-502.50-52	PO NUM 052845	2,061.97	
27678		PI4741		00	07/01/2020	051-5105-502.50-52	PO NUM 052845	791.70	
27678		PI4742		00	07/01/2020	051-5105-502.50-52	PO NUM 052845	2,061.96	
27927		PI4743		00	07/01/2020	051-5105-502.60-61	PO NUM 053628	3,274.20	
27686		PI4758		00	07/01/2020	051-5105-502.50-52	PO NUM 052845	2,237.85	

VEND NO / INVOICE NO	SEQ#	VENDOR NAME / VOUCHER NO	P.O. NO	BNK	CHECK/DUE DATE	ACCOUNT NO	ITEM DESCRIPTION	CHECK AMOUNT	EFT, EPAY OR HAND-ISSUED AMOUNT
0004336	00	WATERLINK INC							
							VENDOR TOTAL *	11,736.51	
0005136	00	WEISS CONSTRUCTION CO LLC							
10045587	#24	PI4734		00	07/01/2020	055-7105-502.60-58	PO NUM 048410 ANAEROBIC LAGOONS AND GAS SCRUBBING SYSTEM	EFT:	691,372.99
							VENDOR TOTAL *	.00	691,372.99
9999999	00	WELLS, SIDNEY E							
000079489		UT		00	07/01/2020	051-0000-143.00-00	MANUAL CHECK	68.43	
							VENDOR TOTAL *	68.43	
0000482	00	WESCO RECEIVABLES CORP							
491867		PI4491		00	07/01/2020	051-0000-154.00-00	PO NUM 053936	EFT:	1,780.48
498983		PI4652		00	07/01/2020	051-0000-154.00-00	PO NUM 053493	EFT:	449.40
498188		PI4731		00	07/01/2020	051-0000-154.00-00	PO NUM 054018	EFT:	481.50
496856		PI4593		00	07/01/2020	051-5205-580.50-35	PO NUM 053686	EFT:	4,438.36
							VENDOR TOTAL *	.00	7,149.74
9999999	00	WIESELER, WHITNEY C							
000077037		UT		00	07/01/2020	051-0000-143.00-00	MANUAL CHECK	66.53	
							VENDOR TOTAL *	66.53	
0003818	00	WILLCO INC							
9845		PI4663		00	07/01/2020	055-7105-502.50-35	PO NUM 053963	137.00	
							VENDOR TOTAL *	137.00	
9999999	00	WILLIAMS, ABBEY							
000078819		UT		00	07/01/2020	051-0000-143.00-00	MANUAL CHECK	46.12	
							VENDOR TOTAL *	46.12	
9999999	00	WINTERSTEIN, LOGAN							
000079001		UT		00	07/01/2020	051-0000-143.00-00	MANUAL CHECK	128.29	
							VENDOR TOTAL *	128.29	
9999999	00	WOLFE, DAVID A & JESSICA							
000061555		UT		00	07/01/2020	051-0000-143.00-00	MANUAL CHECK	59.80	
							VENDOR TOTAL *	59.80	
9999999	00	WOODRING, JASY J							
000078851		UT		00	07/01/2020	051-0000-143.00-00	MANUAL CHECK	23.37	
							VENDOR TOTAL *	23.37	
0003544	00	XYLEM WATER SOLUTIONS USA INC							
3556B25142		PI4637		00	07/01/2020	055-0000-154.00-00	PO NUM 053973	2,535.17	
3556B24498		PI4599		00	07/01/2020	055-7105-502.50-35	PO NUM 053948	435.00	
							VENDOR TOTAL *	2,970.17	
9999999	00	ZETINO MEJIA, FELIPE							
000080815		UT		00	07/01/2020	051-0000-143.00-00	MANUAL CHECK	135.23	
							VENDOR TOTAL *	135.23	

VEND NO / INVOICE NO	SEQ#	VENDOR NAME / VOUCHER NO	P.O. NO	BNK	CHECK/DUE DATE	ACCOUNT NO	ITEM DESCRIPTION	CHECK AMOUNT	EFT, EPAY OR HAND-ISSUED AMOUNT
9999999	00								
							EFT/EPAY TOTAL ***		4,248,869.17
							TOTAL EXPENDITURES ****	786,337.44	4,248,869.17
						GRAND TOTAL	**********		5,035,206.61

STAFF REPORT

TO: Utility and Infrastructure Board

FROM: Dave Goedeken, Director of Public Works/City Engineer

DATE: June 30, 2020

SUBJECT: June 16, 2020 Traffic Committee Report

Recommendation:	Recommend approval of, and place June 16th, 2020 Traffic Committee Report into the record.

Background: City Staff meets monthly to consider traffic related issues in the City of Fremont. The committee met on June 16, 2020 to consider five items. (See Attached Committee Report)

1) "Two Way Street Ahead" located on C Street between 1st and 2nd Streets.
2) Request to remove "No Trucks" sign from Luther Road North of Morningside Road
3) Request for "No Parking" at 1430 Logan Street.
4) Request for placement of 3 way "Stop" signs at the intersection of Cuming and Lincoln.
5) Speeding traffic complaint on North Howard Street between 3rd and 4th Streets.

The committee recommends the following:

- Do not replace sign on C Street
- Remove "No Trucks" sign from Luther Road.
- No formal action on Logan Street
- No formal action on Cuming and Lincoln.
- Place traffic counter on Howard Street and continue item to July Traffic Committee Meeting.

Fiscal Impact: NA

TRAFFIC COMMITTEE MEETING REPORT

ITEMS FOR DISCUSSION **JUNE 16TH, 2020**

ATTENDEES: DAVE GOEDEKEN, MARK VYHLIDAL, VERONICA TRUJILLO, JEFF ELLIOTT

1) "Two Way Street Ahead" located on C Street between 1st and 2nd Streets.

   This sign has been at this location for numerous years but was removed to widen a driveway to a property. The committee considered the need for the sign to be placed back at this location. C Street is a Southbound one way street, and the sign was to warn cars approaching 1st Street that 1st Street is a two way street.

   The committee recommends the sign not be replaced and no further action taken.

2) Request to remove "No Trucks" sign from Luther Road North of Morningside Road.

   Staff has received a request to consider removing the "No Trucks" sign from the signpost on Luther Road just North of Monringside Road. This sign has been in this location a number of years to prevent truck traffic turning North up Luther Road from Morningside Road. Due to a new business locating on Luther Road the sign was causing confusion for trucks needing to access this new site.

   The committee recommends removal of the sign, no formal action is needed by the City Council.

3) Request for "No Parking" at 1430 Logan Street. This request stated there are numerous cars parking in the street in this vicinity on a regular basis making it difficult for residents to leave their driveways. (see attached letter) the requester would like the City to restrict parking in this area to improve access to the street.

   Staff inspected the site and there were cars parked in the street at the time of inspection. The vehicles parked appeared to be parked legally. After discussion the Committee voted to recommend no formal action on this request.

4) Request for placement of 3 way “Stop” signs at the intersection of Cumings and Lincoln. This is a tee intersection with Southbound Lincoln and East and Westbound Cumings. The Southbound leg of the intersection is marked with a stop sign while the East and Westbound legs of the intersection are unmarked.

   The Southbound stop sign has been recently placed at this intersection at the request of the a neighboring property owner. The request now is to place additional signs in the East and Westbound directions. There are no other stop signs on this stretch of Cuming Street.

   Committee recommends the intersection remain signed as it is and no further action be taken.

5) Speeding traffic complaint on North Howard Street between 3rd and 4th Streets. A resident on this street requeasted the City look into speeding traffic in this area. There is a school located within a block of the location which results in high amount of pedestrian and vehicle traffic in the mornings and afternoons.

   Committee has recommended the Engineering Department place traffic counters in the vicinity to gauge the actual speeds. Item will be discussed again by the committee at the July meeting.

STAFF REPORT

TO: Utility and Infrastructure Board

FROM: Dave Goedeken, Director of Public Works/City Engineer

DATE: June 30,2020

SUBJECT: Agreement with Nebraska Department of Transportation for the Placement of Emergency Vehicle Preemption Equipment at the Intersection of Highway 77 and Cloverly Road.

Recommendation: Recommend Approval of Resolution

Background: The City wishes to install Emergency Vehicle Preemption Equipment to the traffic signal located at Cloverly Road and Highway 77. Since this signal is on the State Highway system permission is needed from the Nebraska Department of Transportation. Agreement ZL2002 allows the City to install the equipment and sets the terms of cost and future maintenance.

Preemption at this intersection allows emergency vehicles to receive preference as they approach the signal in an emergency situation.

Fiscal Impact:

NEBRASKA
Good Life. Great Journey.
DEPARTMENT OF TRANSPORTATION

AGREEMENT NO. ZL2002

STATE OF NEBRASKA, DEPARTMENT OF TRANSPORTATION
CITY OF FREMONT
EMERGENCY VEHICLE PREEMPTION INSTALLATION

THIS AGREEMENT is between the City of Fremont, a municipal corporation of the State of Nebraska ("City"), and State of Nebraska, Department of Transportation ("State"), collectively referred to as the "Parties".

WITNESSETH:

WHEREAS, State is provided with total jurisdiction in matters involving the installation and operation of traffic control devices on State Highway extensions through such corporate areas as provided by Neb. Rev. Stat. § 60-6, 120, and

WHEREAS, City desires to install Emergency Vehicle Preemptions ("Preemptions") to existing highway traffic signals, at no cost to the State, and

WHEREAS, State is willing to allow the City to install the above said Preemptions on existing highway traffic signals under the following terms and conditions, and

WHEREAS, City Council has authorized the Mayor to sign this Agreement, as evidenced by the Resolution of City Council, as shown on Exhibit "A".

NOW THEREFORE, in consideration of these facts and the mutual promises of the Parties hereto, the Parties agree as follows:

SECTION 1. DURATION OF THE AGREEMENT

1.1 ***Effective Date*** -This Agreement is effective immediately on the date it is fully executed by the Parties.

1.2 ***Identifying Date*** - For convenience, this Agreement's identifying date will be the date State signed the agreement.

1.3 ***Duration*** - This Agreement will remain in full force and effect for future responsibilities of City described herein, such as installation and maintenance of Emergency Vehicle Preemptions, unless such responsibilities have been rescinded by State.

1.4 ***Termination*** - Further, State reserves the right to terminate the agreement as provided herein.

SECTION 2. CITY RESPONSIBILITIES

2.1 City agrees to design and install Emergency Vehicle Preemptions ("Preemptions") on one or more existing highway traffic signals. Said preemptions shall be installed at no cost to the State. Installation shall be by a qualified electrical contractor approved by the State.

2.2 Upon completion of the initial installation, City may install other Emergency Vehicle Preemptions at various other signals as City desires, all at no cost to the State. City shall notify State in advance of each installation.

2.3 City shall maintain all Emergency Vehicle Preemption equipment for all existing and future preemption installations at no cost to the State. The City shall notify the State in advance of performing any work inside of a traffic signal controller cabinet.

2.4 City agrees to accept full liability for the operation of preemption system and its subsequent effects on the traffic operation. City agrees to hold the State harmless in any lawsuit pertaining to the preemption operation and its effects upon traffic flow and safety.

2.5 The Mayor is authorized by the City Council to execute this Agreement, as evidenced by the Resolution of City Council, attached as Exhibit "A" and incorporated herein by this reference.

SECTION 3. STATE RESPONSIBILITIES

3.1 State will adjust the controller timing at each installation to accommodate the Emergency Vehicle Preemption at no cost to City.

3.2 In the event of a controller problem, State reserves the right to disconnect the Emergency Vehicle Preemption system until timely repairs are completed. Preemption will not be disconnected unless absolutely necessary and the City will be notified as soon as possible. Preemption will be reconnected as soon as all parts of the controller are working properly.

SECTION 4. PROJECT TEMPORARY TRAFFIC CONTROL

4.1 All temporary traffic control devices will conform to the latest approved edition of the Manual on Uniform Traffic Control Devices and Nebraska Supplements thereto.

4.2 If City is to perform or contract for any work on the state highway within the project limits, City will develop a traffic control plan related to that work. The plan will be provided to

State's Project Manager for review and acceptance. City will provide, operate and maintain City's traffic control devices in accordance with its accepted traffic control plan.

4.3 City's work must comply with all traffic safety regulations, including those prescribed in the latest approved edition of the Manual of Uniform Traffic Control Devices and the Nebraska Supplement thereto. City shall use caution when working in State ROW.

SECTION 5. TERMINATION

State has the sole discretion to suspend the work in part or in whole or to terminate this Agreement; such action on its part will in no event be deemed a breach of this Agreement by State. State shall notify City in writing of such determination.

SECTION 6. ENTIRE AGREEMENT

This Agreement, including all exhibits and documents incorporated or included herein, constitutes the entire agreement of the Parties. This Agreement supersedes all communications, representations, understandings, either oral or written hereto, leading up to this Agreement. Any existing written agreements between the Parties remain in effect, except the language of this Agreement governs over conflicting language on the same subject in an existing written agreement.

[Remainder of Page Intentionally Left Blank]

IN WITNESS WHEREOF, the Parties hereby execute this agreement pursuant to lawful authority as of the date signed by each party.

EXECUTED by the City this _____ day of _____, 2020.

ATTEST:

CITY OF FREMONT

_____
City Clerk

_____
Mayor

EXECUTED by State this _____ day of _____, 2020.

STATE OF NEBRASKA
DEPARTMENT OF TRANSPORTATION
Daniel J. Waddle, P.E.

_____
Traffic Engineer

RECOMMENDED:
Timothy W. Weander, P.E.

_____
District 2 Engineer Date

STAFF REPORT

TO: Utility and Infrastructure Board

FROM: Alan Kaspar, Director of Electrical Engineering

Troy Schaben, Assistant City Administrator Utilities

DATE: June 30, 2020

SUBJECT: Purchase of Substation Transformers

Recommendation: Recommend City Council approve resolution awarding contract for Purchase of Substation Transformers to Graybar Electric Company Inc.

Background:

A new substation, Substation H, will be constructed to serve additional electrical demand from upgrades and additions to Wholestone Farms facilities. Due to long lead-times, substation transformers are typically purchased before substation construction begins in order to have them in service by the required energization date.

Bids were solicited and received for the purchase of two substation transformers. Bids were opened and read aloud at 2:30pm on June 16, 2020. Twelve bids were received:

Manufacturer	Manuf. Rep.	Lump Sum Base Bid	Adjusted for Losses	Delivery	Bid Bond
GE	Graybar Electric Company Inc.	$1,460,086.36	**$1,618,386.36**	March 31 2021	Y
ABB	PDS Inc.	$1,607,700.00	**$1,770,920.00**	June 30 2021	Y
Pralar S.A.	Fleming Electric	$1,173,089.00	**$1,349,249.00**	April 15 2021	Y
Shihlin	Wesco International, Inc.	$1,706,380.00	**$1,901,380.00**	June 10 2021	Y
WEG	Moehn Sales	$1,537,624.00	**$1,677,282.00**	36-38 Weeks ARO	Y
Virginia Transformer	Resco	$1,191,624.00	**$1,364,484.00**	January 10 2021	Y
Niagara	Evans-Lipka & Associates, Inc.	$1,405,466.00	**$1,626,486.00**	June 30 2021	Y
Howard Industries	Dutton-Lainson Company	$1,310,000.00	**$1,499,610.00**	June 30 2021	Y
SPX Waukesha	Cahoon Sales	$1,605,661.00	**$1,772,341.00**	26-30 Weeks ARO	Y
Pennsylvania	Pennsylvania Transformer	$1,309,690.00	**$1,497,803.80**	32-36 Weeks ARO	Y
Delta Star	Energy Solutions Inc.	$1,743,692.00	**$1,911,792.00**	June 30 2021	Y
Hyundai	Hyundai Corporation	$1,532,758.00	**$1,679,658.00**	June 30 2021	Y

The submitted proposals were evaluated using the following criteria:

- Lump sum base price including delivery, assembly, oil filling and testing.
- Delivery date.
- Adjusted price for transformer losses: Some transformers are designed and built to be more efficient than others to some degree. There is a long-term cost associated with the energy loss due to these varying efficiencies, known as ‘losses.’ Staff requires bidders to submit technical loss data for the proposed transformers so that

a long-term cost can be calculated accounting for losses. The 'adjusted price' accounting for these losses is shown in the bid tabulation.

- Experience of manufacturer in regards to the type and size of the transformer as well as experience in the region.
- Local/regional manufacturer's representative proposing the transformer.
- Acceptance of Terms & Conditions as dictated by the City of Fremont in the contract documents.
- Adherence to the extensive technical specifications of the contract documents.

Based on the above criteria, staff has determined that Graybar Electric Company Inc. has submitted the best suited proposal and is the lowest responsible bidder.

Graybar Electric Company Inc. is the local vendor and manufacturer's representative for GE (General Electric). The City has extensive favorable experience utilizing Graybar and GE equipment.

Lower adjusted price bids received from Pralar S.A., Virginia Transformer Corp., Pennsylvania Transformer and Howard Industries, Inc. were found to have deficiencies that did not satisfy criteria as outlined above, including:

- Lack of staff experience with the manufacturer; no track record of supplying like transformers anywhere in North America.
- No local manufacturer's representative; concerns with coordination and logistics with manufacturers from overseas.
- Exceptions to City of Fremont Contract Terms & Conditions.
- Exclusions of applicable taxes.
- Exceptions to the technical specifications.

Staff therefore recommends that the Utility and Infrastructure Board accept the proposal from Graybar Electric Company Inc., and recommend that City Council approve resolution to award the Contract for Purchase of Substation Transformers to Graybar Electric Company Inc. in the amount of $1,460,086.36

Fiscal Impact:

Wholestone Farms has agreed to reimburse the City for 63.63%, or $929,052.95, to purchase these transformers. The remaining 36.37%, or $531,033.41, is the City's fiscal impact for this purchase, and is within the current capital budget.

Section 00300

Bid Proposal Form

Pages 5 of 5

Bid Proposal Form

Project: **SUBSTATION TRANSFORMERS**
City of Fremont, Nebraska - Department of Utilities

This Bid is Submitted to (Buyer): Attn: Tyler Ficken, City Clerk
City of Fremont - Department of Utilities
400 East Military Avenue
Fremont, NE 68025

This Bid is Submitted by (Bidder): Graybar Electric Company
4360 S. 90th Street
Omaha NE 68127

1.1 This Bid for Substation Transformers is submitted to: City of Fremont, Nebraska, Department of Utilities, herein after referred to as Buyer.

The undersigned Bidder proposes and agrees, if this Bid is accepted, to enter into an Agreement with Buyer in the form included with the Bidding Documents to furnish all Goods and Special Services as specified or indicated in the Bidding Documents for the prices and within the times indicated in this Bid and in accordance with the other terms and conditions in the Bidding Documents.

2.1 Bidder accepts all terms and conditions of the Agreement, the Notice to Bidders and Public Hearing and Instructions to Bidders, including without limitation those dealing with the disposition of Bid Security. The Bid will remain subject to acceptance for 60 days after the Bid opening, or for such longer period of time that Bidder may agree to in writing upon request of Buyer.

2.2 Bidder accepts the provisions of the Agreement as to the assignment of the Contract to furnish the Goods and Special Services.

3.1 In submitting this Bid, Bidder represents, as set forth in the Agreement, that:

3.1.1 Bidder has examined and carefully studied the Bidding Documents. the other related data identified in the Bidding Documents, and the following Addenda, receipt of all which is hereby acknowledged.

Addendum Number	Addendum Date
#1	May 29, 2020
#2	June 1, 2020
#3	June 4, 2020
#4	June 9, 2020

3.1.2 If specified, or if in Bidder's judgment, any local condition may affect cost, progress or the furnishing of Goods and Special Services, Bidder has visited the Point of Destination and become familiar with and is satisfied as to the general,

local, and Point of Destination conditions that may affect cost, progress, and the Furnishing of Goods and Special Services.

3.1.3 Bidder is familiar with and is satisfied as to all federal, state and local Laws and Regulations that may affect cost, progress and the furnishing of Goods and Special Services.

3.1.4 Bidder declares that he has examined to his own satisfaction the Drawings, Specifications, and other Bidding Documents, the character and location of the point of destination, the conformation of the ground, the character, quality and quantity of materials to be supplied, the character of equipment and facilities needed preliminary to and during the prosecution of the furnishing of Goods and Special Services, the general and local conditions, and other matters which can affect the furnishing of Goods and Special Services under this contract; and that this proposal is made with full knowledge of the intent and purpose of the same. Bidder further declares that in respect to these matters he is not relying upon any representation made to him by any officer, agent, or employee of the Buyer, or by any other person on behalf of Buyer, but that he relies solely upon his own investigation.

3.1.5 Bidder has given Buyer written notice of all conflicts, errors, ambiguities, or discrepancies that Bidder has discovered in the Bidding Documents, and the written resolution thereof by Buyer is acceptable to Bidder.

3.1.6 The Bidding Documents are generally sufficient to indicate and convey understanding of all terms and conditions for furnishing the Goods and Special Services for which this Bid is submitted.

3.1.7 Bidder further represents that this Bid is genuine and not made in the interest of or on behalf of any undisclosed individual or entity and is not submitted in conformity with any agreement or rules of any group, association, organization or corporation; Bidder has not directly or indirectly induced or solicited any other Bidder to submit a false or sham Bid; Bidder has not solicited or induced any individual or entity to refrain from bidding; and Bidder has not sought by collusion to obtain for itself any advantage over any other Bidder or over Buyer.

3.1.8 The undersigned certifies that the bid prices contained herein have been carefully checked and are submitted as correct and final. It is proposed to furnish Goods and Special Services at the prices set out for each item.

4.1 Bidder will furnish (FOB Transformer Pad) two (2) Substation Transformers Goods and Special Services in accordance with the Contract Documents for the following price, including sales tax:

Lump Sum Base Bid for two (2) Substation Transformers:

One million four hundred Sixty thousand eighty six Dollars $1,460,086.36
(Use Words) dollars 36/100 (Use Figures)

4.1.1 Price per transformer for the following (for accounting purposes):

a.) Purchase price of transformer complete: $ 599,274.61

b.) Price to deliver, fill, assemble and test complete: $ 80,205.00

4.1.2 Price to furnish spare equipment for transformer delivered to site:

a.) One (1) 69kV 800A 350kV BIL Bushing: $ 2252.63

b.) One (1) 15kV 2000A 110kV BIL Sidewall Mounted LV Bushing: $ 1351.58

c.) One (1) 15kV 2000A 110kV BIL Cover Mounted Neutral Bushing: $ 1351.58

d.) One (1) Spare Electronic Temperature Monitor/Annunciator: $ 7771.61

5.1 Losses

a.) No Load Loss (Guaranteed) (ONAN 55C Rating) 10.5 watts at 100% voltage

b.) Full Load Loss (Guaranteed) (ONAN/AF/AF 55C Rating) 55 / ____ / ____ watts at 100% voltage

c.) Total Losses (Guaranteed) (1a + 1b @ ONAN) 65.5 watts at 100% voltage

5.2 Warranty

a.) Transformer furnished with twenty-four-month warranty as specified?

X Yes ____ No

b.) If not, provide a description of the warranty terms as offered below:

_____

_____

_____

_____

(continued)

6.1 The Bidder shall provide the length of time required, in weeks after the receipt of the order (ARO), for submittal of the following Drawings/data for the Engineer's approval.

		No. Weeks after Award
a.)	Complete documentation list (All Drawings and Manuals)	12-16 weeks
b.)	Advance Transformer Outline	12-16 weeks
c.)	Final Transformer Outline	16-20 weeks
d.)	Preliminary Transformer Wiring to Determine All External Connections	12-16 weeks
e.)	Final Transformer Wiring	16-20 weeks

7.1 Bidder agrees that the Furnishing of Goods and Special Services will be substantially completed on or before March 31, 2021 and completed and ready for final payment in accordance with paragraph 10.6 of the General Conditions on or before March 31, 2021.

8.1 Attached is a Bid Security in the amount of at least 5% of the total as indicated above. In case of default or failure on the part of the undersigned to enter into said contract for the construction of the above work and to furnish the required bond within ten days, it is hereby agreed that the accompanying Bid Security may be cashed and deposited with the Buyer, and it is further agreed that in that case the Sum of

Seventy three thousand four dollars 32/100 Dollars $ 73,004.32
(Use Words) (Use Figures)

is the amount of the Bid Security accompanying this proposal, is the fair measure of the amount of the damages that the City of Fremont, Nebraska, Department of Utilities will sustain in case the undersigned shall fail or refuse to enter into the Agreement or furnish bond if said Contract is awarded to him.

9.1 The terms used in this Bid with initial capital letters have the meanings indicated in the Instructions to Bidders, the General Conditions and the Supplementary Conditions.

Respectfully submitted on 6-16 2020.

Firm Name Coraybar Electric Company Inc (SEAL)

Doing Business As Coraybar Electric Company, Inc

State of Incorporation Missouri

(continued)

Type [Individual, Partnership, Joint Venture, Corporation (General Business, Professional, Service, Limited Liability)]

Corporation

By Connie Hergenrader
(Typed or Printed) – (Attach evidence of authority to sign)

(Signature)

Attest Patrick Gillen

Title Sales Rep

Business Address 8170 Lackland
Bel Ridge MO 63114

Phone Number 314-573-2001

Fax Number 314-573-0000

GraybaR. POWERING THE NEW ERA

Stuart Jaeger
Title *Director Finance*
Direct: 314-573-2004
Cell: 314-378-8401
Stuart.jaeger@graybar.com

June 16, 2020

Mr. Tyler Ficken
City Clerk
City of Fremont – Department of Utilities
400 East Military Avenue
Fremont, NE 68025

RE: SUBSTATION TRANSFORMER BID

Dear Tyler-
This letter serves as confirmation that Connie Hergenrader has been provided with the authority to sign the attached proposal related to this project on behalf of Graybar Electric Company, Inc.

If you have any questions or require further information, please contact me at your convenience.

Best regards,

Stuart Jaeger

8170 Lackland Rd. St. Louis, MO 63114
www.graybar.com

Bid Proposal Form

Project: **SUBSTATION TRANSFORMERS**
City of Fremont, Nebraska - Department of Utilities

This Bid is Submitted to (Buyer): Attn: Tyler Ficken, City Clerk
City of Fremont - Department of Utilities
400 East Military Avenue
Fremont, NE 68025

This Bid is Submitted by (Bidder): Graybar Electric Company
4360 S. 90th Street
Omaha NE 68127

1.1 This Bid for Substation Transformers is submitted to: City of Fremont, Nebraska, Department of Utilities, herein after referred to as Buyer.

The undersigned Bidder proposes and agrees, if this Bid is accepted, to enter into an Agreement with Buyer in the form included with the Bidding Documents to furnish all Goods and Special Services as specified or indicated in the Bidding Documents for the prices and within the times indicated in this Bid and in accordance with the other terms and conditions in the Bidding Documents.

2.1 Bidder accepts all terms and conditions of the Agreement, the Notice to Bidders and Public Hearing and Instructions to Bidders, including without limitation those dealing with the disposition of Bid Security. The Bid will remain subject to acceptance for 60 days after the Bid opening, or for such longer period of time that Bidder may agree to in writing upon request of Buyer.

2.2 Bidder accepts the provisions of the Agreement as to the assignment of the Contract to furnish the Goods and Special Services.

3.1 In submitting this Bid, Bidder represents, as set forth in the Agreement, that:

3.1.1 Bidder has examined and carefully studied the Bidding Documents, the other related data identified in the Bidding Documents, and the following Addenda, receipt of all which is hereby acknowledged.

Addendum Number	Addendum Date
#1	May 29, 2020
#2	June 1, 2020
#3	June 4, 2020
#4	June 9, 2020

3.1.2 If specified, or if in Bidder's judgment, any local condition may affect cost, progress or the furnishing of Goods and Special Services, Bidder has visited the Point of Destination and become familiar with and is satisfied as to the general.

local, and Point of Destination conditions that may affect cost, progress, and the Furnishing of Goods and Special Services.

3.1.3 Bidder is familiar with and is satisfied as to all federal, state and local Laws and Regulations that may affect cost, progress and the furnishing of Goods and Special Services.

3.1.4 Bidder declares that he has examined to his own satisfaction the Drawings, Specifications, and other Bidding Documents, the character and location of the point of destination, the conformation of the ground, the character, quality and quantity of materials to be supplied, the character of equipment and facilities needed preliminary to and during the prosecution of the furnishing of Goods and Special Services, the general and local conditions, and other matters which can affect the furnishing of Goods and Special Services under this contract; and that this proposal is made with full knowledge of the intent and purpose of the same. Bidder further declares that in respect to these matters he is not relying upon any representation made to him by any officer, agent, or employee of the Buyer, or by any other person on behalf of Buyer, but that he relies solely upon his own investigation.

3.1.5 Bidder has given Buyer written notice of all conflicts, errors, ambiguities, or discrepancies that Bidder has discovered in the Bidding Documents, and the written resolution thereof by Buyer is acceptable to Bidder.

3.1.6 The Bidding Documents are generally sufficient to indicate and convey understanding of all terms and conditions for furnishing the Goods and Special Services for which this Bid is submitted.

3.1.7 Bidder further represents that this Bid is genuine and not made in the interest of or on behalf of any undisclosed individual or entity and is not submitted in conformity with any agreement or rules of any group, association, organization or corporation; Bidder has not directly or indirectly induced or solicited any other Bidder to submit a false or sham Bid; Bidder has not solicited or induced any individual or entity to refrain from bidding; and Bidder has not sought by collusion to obtain for itself any advantage over any other Bidder or over Buyer.

3.1.8 The undersigned certifies that the bid prices contained herein have been carefully checked and are submitted as correct and final. It is proposed to furnish Goods and Special Services at the prices set out for each item.

4.1 Bidder will furnish (FOB Transformer Pad) two (2) Substation Transformers Goods and Special Services in accordance with the Contract Documents for the following price, including sales tax:

Lump Sum Base Bid for two (2) Substation Transformers:

One Million four hundred Sixty thousand eighty six Dollars $1,460,086.36
(Use Words) dollars 36/100 (Use Figures)

4.1.1 Price per transformer for the following (for accounting purposes):

a.) Purchase price of transformer complete: $ 599,274.61

b.) Price to deliver, fill, assemble and test complete: $ 80,205.00

4.1.2 Price to furnish spare equipment for transformer delivered to site:

a.) One (1) 69kV 800A 350kV BIL Bushing: $ 2252.63

b.) One (1) 15kV 2000A 110kV BIL Sidewall Mounted LV Bushing: $ 1351.58

c.) One (1) 15kV 2000A 110kV BIL Cover Mounted Neutral Bushing: $ 1351.58

d.) One (1) Spare Electronic Temperature Monitor/Annunciator: $ 7771.61

5.1 Losses

a.) No Load Loss (Guaranteed) (ONAN 55C Rating) 10.5 watts at 100% voltage

b.) Full Load Loss (Guaranteed) (ONAN/AF/AF 55C Rating) 55 / ____ / ____ watts at 100% voltage

c.) Total Losses (Guaranteed) (1a + 1b @ ONAN) 65.5 watts at 100% voltage

5.2 Warranty

a.) Transformer furnished with twenty-four-month warranty as specified?

X Yes ____ No

b.) If not, provide a description of the warranty terms as offered below:

_____

_____

_____

_____

(continued)

6.1 The Bidder shall provide the length of time required, in weeks after the receipt of the order (ARO). for submittal of the following Drawings/data for the Engineer's approval.

		No. Weeks after Award
a.)	Complete documentation list (All Drawings and Manuals)	12-16 weeks
b.)	Advance Transformer Outline	12-16 weeks
c.)	Final Transformer Outline	16-20 weeks
d.)	Preliminary Transformer Wiring to Determine All External Connections	12-16 weeks
e.)	Final Transformer Wiring	16-20 weeks

7.1 Bidder agrees that the Furnishing of Goods and Special Services will be substantially completed on or before March 31, 2021 and completed and ready for final payment in accordance with paragraph 10.6 of the General Conditions on or before March 31, 2021.

8.1 Attached is a Bid Security in the amount of at least 5% of the total as indicated above. In case of default or failure on the part of the undersigned to enter into said contract for the construction of the above work and to furnish the required bond within ten days, it is hereby agreed that the accompanying Bid Security may be cashed and deposited with the Buyer, and it is further agreed that in that case the Sum of

Seventy three thousand four dollars & 32/100 Dollars $73,004.32
(Use Words) (Use Figures)

is the amount of the Bid Security accompanying this proposal, is the fair measure of the amount of the damages that the City of Fremont, Nebraska. Department of Utilities will sustain in case the undersigned shall fail or refuse to enter into the Agreement or furnish bond if said Contract is awarded to him.

9.1 The terms used in this Bid with initial capital letters have the meanings indicated in the Instructions to Bidders, the General Conditions and the Supplementary Conditions.

Respectfully submitted on June 16 20 20.

Firm Name Graybar Electric Company (SEAL)

Doing Business As Graybar Electric Company, Inc

State of Incorporation Missouri

(continued)

Type [Individual, Partnership, Joint Venture, Corporation (General Business, Professional, Service, Limited Liability)]

Corporation

By Danna B. Stone

(Typed or Printed) – (Attach evidence of authority to sign)

Danna B. Stone

(Signature)

Attest

Title District Vice President

Business Address 8170 Lackland Road

Bel Ridge, MO 63114

Phone Number 314-573-2001

Fax Number 314-573-0000

PROLEC *ISO 9001 CERTIFIED*

Form 3.2.1-D Rev. 0

TECHNICAL PROPOSAL INFORMATION

Customer: *GRAYBAR* Date: **06/03/20**

Proposal No: Spec No: **CONTRACT FOR PURCHASE OF SUBSTATION XFRM- MAY 2020** Item No: **2290071/A**

RATING								
Type	Transformer	Class	H Winding		X Winding		Y Winding	
Phase	3		69 Delta	kV	13.8 Wye	kV	-	kV
Hertz	60	ONAN	15,000	KVA	15,000	KVA	-	KVA
Temp Rise	55\65 °C	ONAF	20,000	KVA	20,000	KVA	-	KVA
Insul Liquid	Oil Type II(inhibited)	ONAF	25,000	KVA	25,000	KVA	-	KVA
		ONAF-65	28,000	KVA	28,000	KVA	-	KVA

ADDITIONAL TAP VOLTAGES		
H Winding (Kv)	± 2 of 2.5 %	DETC
X Winding (Kv)	± 16 of 0.625 %	LTC - FCBN
-	-	

CONNECTIONS FOR OPERATION						
Transformers in Bank	To Transformer From	Phase	Connected	To Transformer To	Phase	Connected
-	-	-	-	-	-	-

PERFORMANCE BASED ON A LOADING OF				
H Winding	69.0	kV	15.0	MVA
X Winding	13.8	kV	15.0	MVA
Y Winding	-	kV	-	MVA
-	-	-	-	-
-	-	-	-	-

DIELECTRIC TESTS			
Applied Voltage (To other winding and ground)	H Winding	140	kV
	X Winding	26	kV
	Y Winding	-	kV
Induced Voltage	One Hour	63	kV
	Enh 7200cy	81	kV

INSULATION LEVELS		
ITEMS	Basic Lightning Impulse (kV)	
	Winding	Bushing
H Line	350	350
H neutral	-	-
X line	110	110
X neutral	110	110
Y line	-	-

PERFORMANCE DATA, Based on **75** °C Reference Temperature, **15** MVA Altitude: **1000** Mts.

Exciting Current		Losses (KW)			Regulation	
Excitation	% Ex	No Load Losses (20°C)	Load Losses	Total Losses	Power Factor	% Regulation
100%	.618	10.5	55	65.5	0.80	6.592
110%	.848	12.9 *	55	67.9 *	1.0	0.866
-	-	* Not Guaranteed			-	-

AUXILIARY (COOLING) LOSSES			
Transformer KVA		Class	KWatts Loss
15,000	-	ONAN	0
20,000	-	ONAF	2
25,000	-	ONAF	4
-	-	-	-
-	-	-	-
Average Sound Level	70/72/73	dB	ONAN/ONAF/ONAF

PERCENT IMPEDANCE VOLTS					
% IZ	Between Windings	At kVA	% IZ Zero	Between Windings	At kVA
10	H-X	15,000	10*	H-X	15,000
*	-	-	*	-	-
*	-	-	*	-	-

* APPROXIMATE ONLY, NOT GUARANTEED

EFFICIENCIES (p.f = 1) AT 15 MVA				
Load	Full Load	3/4 Load	1/2 Load	1/4 Load
%	99.565	99.633	99.678	99.630

MECHANICAL DATA
Not for Construction Purposes

Outline Dwg No: DW_229007A01

Dimensions (Approximate)		Ft. (Mts.)
Height	(A)	13.8 (4.20)
Width	(B)	24.3 (7.42)
Depth	(C)	18.0 (5.48)
Height over Cover	(D)	10.2 (3.10)
Untanking (Plus slings)	(E)	17.7 (5.41)
Shipping Dimensions:Ft	WxDxH	18.5 x 11.8 x 10.2
Masses (Approximate)		pounds (Kg)
Core and Coils		51,940 (23,560)
Tank and Fittings		54,940 (24,920)
Liquid 4,970 Gal		37,390 (16,960)
Total Mass		144,270 (65,440)
Shipping without OIL		85,060 (38,580)
Shipping with OIL H=11.5′		115,910 (52,580)

Prepared by: Junior Karin Garza de Anda / Proposal Engineering

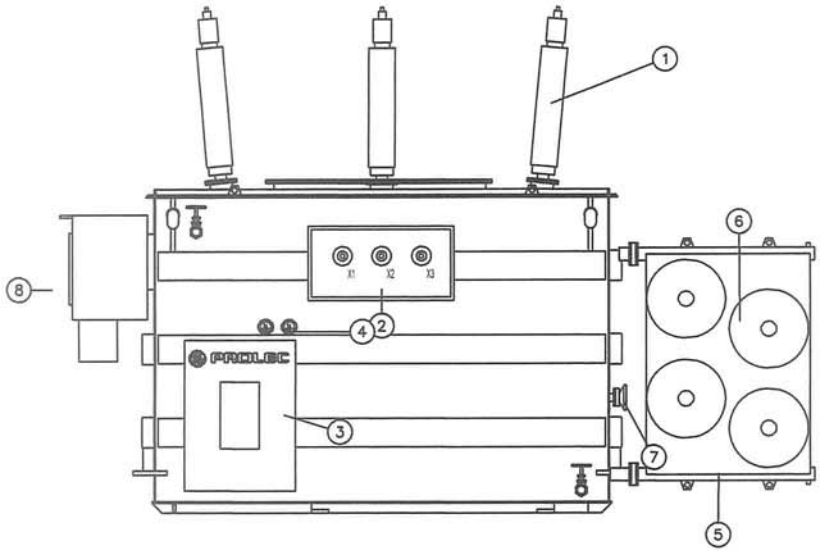

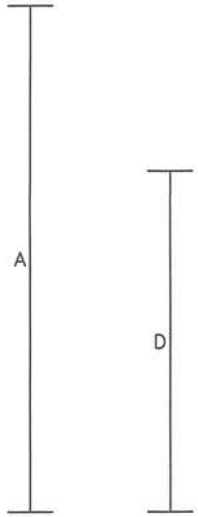

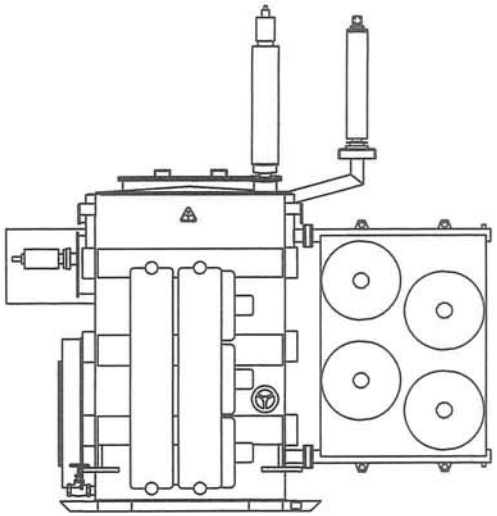

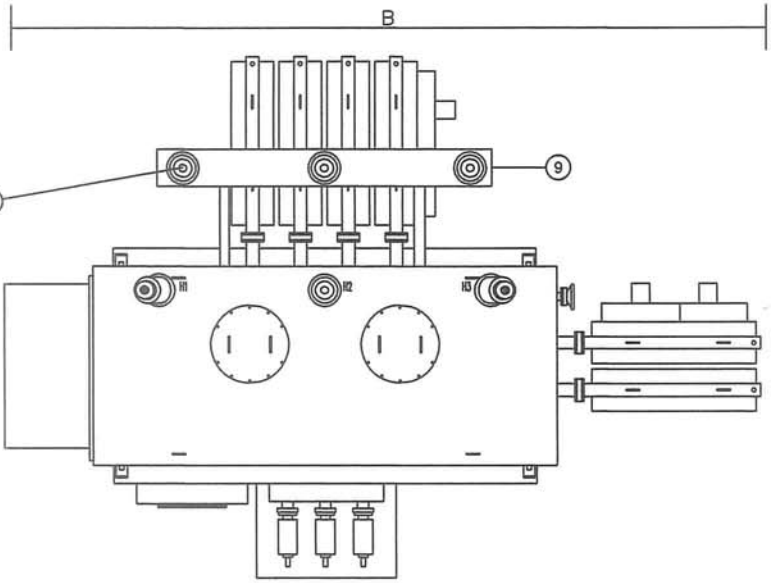

1.- HV BUSHINGS
2.- LV BUSHINGS
3.- CONTROL CABINET
4.- ACCESSORIES
5.- RADIATORS
6.- FANS
7.- DE-ENERGIZED TAP CHANGER
8.- ON LOAD TAP CHANGER
9.- HV SURGE ARRESTER BRACKETS
10.- HV SURGE ARRESTERS

NOTE: THIS DRAWING IS A PRELIMINARY PROPOSAL AND DOES NOT INDICATE THE EXACT DETAILS OF CONSTRUCTION, ARRANGEMENT OF ACCESSORIES OR THE FINAL DIMENSIONS OF THE TRANSFORMER. THIS INFORMATION SHOULD NOT BE USED FOR FINAL CONSTRUCTION ARRANGEMENTS OR FOR THE FOUNDATION UNLESS SPECIFICALLY APPROVED BY THE FACTORY. ALL DIMENSIONS AND WEIGHTS ARE APPROXIMATE

PROLEC

Drawing:
No. 229007A01

Exhibit E - Dry Air Installation Service

Scope of Work – Assembly, Vacuum Filling, and Field Tests

1. Inspect Impact Recorder (If applicable)
2. Measure Core Ground-Megger® method 500 volts
3. External Inspections
4. Dew Point Test
5. Install as applicable:
    a. Radiators
    b. Conservator tank
    c. HV and LV Bushings
    d. All remaining accessories and gauges.
    e. If the unit includes a Hydran, PROLEC GE will installed the device and the commissioning must be performed by others.
6. Make internal inspection and connections as applicable.
7. Pressure test with Dry Air or Nitrogen at 5psi (Dew point – 50°C or lower)
    a. Hold pressure (5psi) for 24 hours for internal stabilization, take Dew Point reading and record. Maximum 0.5% moisture content is acceptable.
    b. Dry process under vacuum, if results are higher than 0.5%, must be dried with vacuum processing according to the section 3 of the instruction manual. (Note: It is not included process for cold weather hoarding if the assembly of the transformer should be during winter time, extra cost will be charge for this activity)
8. Oil filling process under vacuum.

Final Assembly Testing:

9. Oil.
    a. Dielectric breakdown (prior and after filling)
    b. DGA and oil screen after filling
10. TTR (This test will be performed on all DETC taps, but not on all LTC taps, the scope includes just Neutral, last Lower and last Raise position)
11. Ohmic Resistance test of windings (Just on the nominal position and last Lower and Raise positions)
12. Megger® Core to Ground

13. Megger® Clamps to Ground, if applicable

14. Megger® Windings to each other at 5kV

15. Power Factor Doble® Method @ 10kV

    a. Bushings

    b. Windings

16. Excitation current using 10kV Power Factor Test Set

17. CT tests:

    a. Ratio

    b. Megger®

    c. Saturation

    d. Polarity

18. Control Tests:

Operation of accessories and alarms to control cabinet terminal blocks, we do not include power supply for this test, if the customer wants to do the test will power, the energy should be supply by others during the assembly period time.

Field test results will be sent two weeks after finished the assembly

Terms and Conditions for Installation Services:

The customer is responsible to advise at least three weeks in advance the start working date on site; the announcement should include the contact name and phone number of the person that will be on charge on site.

The work will be performed continuously without dead time.

The work will be start once the transformer is placed on its permanent pad/foundation, and does not include connections to other equipment or control room. To be present during energization time is not included.

No training, future maintenance or following visits are included.

The customer must provide 24 hours site access 7 days a week for the GE Prolec team to perform the job. An additional cost must be considered if the crew does not have access during all week long.

The customer must assure there is enough space for crane handling and temporal storage for the oil and accessories. In case of extra costs incurred for obstruction while performing maneuvers or crane, oil tanker or platform access, these will be borne by the customer.

Any expense associated with dismantling, transportation, temporal power supply, or reinstalling customer's products, is excluded from the scope and will remain the customer's responsibility.

PROLEC

PROLEC GE S. de R.L. de C.V. ISO 9001 CERTIFIED

PAINTING SYSTEM

EXTERIOR.

SURFACE PREPARATION

TANK AND RADIATORS*(**Std. for radiators is galvanized surface coating, if customer requires painted radiators this has to be specified at the time of quotation and the painting std is the next**)

SHOT BLAST PROCESS

CLEANING MATERIAL	GL-50
FINISH	WHITE METAL

* SSPC-SP5 (USA)
* NACE No. 1 (USA)
* SA-3 (SWEDEN)
* 1st QUALITY (U.K.)

PRIMER RICH ZINC EPOXY 2.50 MILS

TECHNICAL INFORMATION:

FINISH	FLAT
COLOR	BROWN
DRYING TIME @ 25 °C	
CONTACT	1 TO 2 HOURS
TO COVER	16 TO 24 HOURS
DRYING TIME @ 60 °C	
CURING	4 HOURS
DRY THICKNESS RECOMMENDED	2.4 TO 3.0 MILS
# OF LAYERS RECOMMENDED	ONE
DURATION OF THE MIX	12 HOURS @ 25 °C
RESISTANCE TO THE TEMPERATURE	194 °C DRY

FINISH ALIPHATIC POLYURETHANE 2.5 MILS

TECHNICAL INFORMATION:

FINISH	GLOSS
COLOR	GRAY ANSI 70
DRYING TIME @ 25 °C	
CONTACT	1 TO 2 HOURS
TO COVER	24 HOURS
DRYING TIME @ 60 °C	
CURING	4 HOURS
# OF LAYERS RECOMMENDED	TWO (1.25 MILS EACH)
DURATION OF THE MIX	4 TO 6 HRS @ 25 °C
RESISTANCE TO THE TEMPERATURE	150 °C DRY

Revision 5 by Luis Bayardo 10/27/98
Revision 6 by Ricardo Bueno 10/ 04/02
Revision 7 by Raymundo Carrasco 2/12/16

PAINTING SYSTEM

INTERIOR .

SURFACE PREPARATION

TANK AND RADIATORS
SHOT BLAST PROCESS
CLEANING MATERIAL — GL-50
FINISH — WHITE METAL

* SSPC-SP5 (USA)
* NACE No. 1 (USA)
* SA-3 (SWEDEN)
* 1st QUALITY (U.K.)

FINISH — HIGH BUILT EPOXY — 3.00 MILS

TECHNICAL INFORMATION:

FINISH	FLAT
COLOR	WHITE METAL
DRYING TIME @ 25 °C	
CONTACT	1 HOURS
TO COVER	18 TO 24 HOURS
DRYING TIME @ 60 °C	
CURING	4 HOURS
DRY THICKNESS RECOMMENDED	3 TO 4 MILS
# OF LAYERS RECOMMENDED	TWO
DURATION OF THE MIX	8 HOURS @ 25 °C
RESISTANCE TO THE TEMPERATURE	140 °C DRY

CONTROL CABINET .

INTERIOR AND EXTERIOR PAINT OF THE CABINET IS GRAY ANSI 70 AND PREPARED IN THE SAME MANNER AS THE EXTERIOR MAIN TANK PROCESS
ALL CONTROL PANELS, PERMANENT AND SWING OUT TYPE, ARE PAINTED WITH SAME SYSTEM EXCEPT THE FINAL COLOR IS GLOSS WHITE ENAMEL.

PROLEC GE. STANDARD TOTAL PAINT THICKNESS

ACCESSORIES	INSIDE THKICNESS(mils) +/-5%	OUT SIDE THICKNESS (mils) +/- 5%		
	PRIMER	PRIMER	FINISH	TOTAL
TANK WALL	3	2.5	2.5	5
PROLEC RADIATOR	-------	2.5	2.5	5
TRANTER RADIATOR	-------	------	3	3
CONTROL CABINET	3	3	2	5
GALVANIZED CONDUIT PIPE	-------	1	1	2

- Dry thickness measurement should be according to standard ASTM D 1186.
- The average minimum paint thickness is 5 mils or according with customer specification.
- The thickness reading has to be performing after the coating paint is dry.

PROLEC

Powering reliable solutions for you

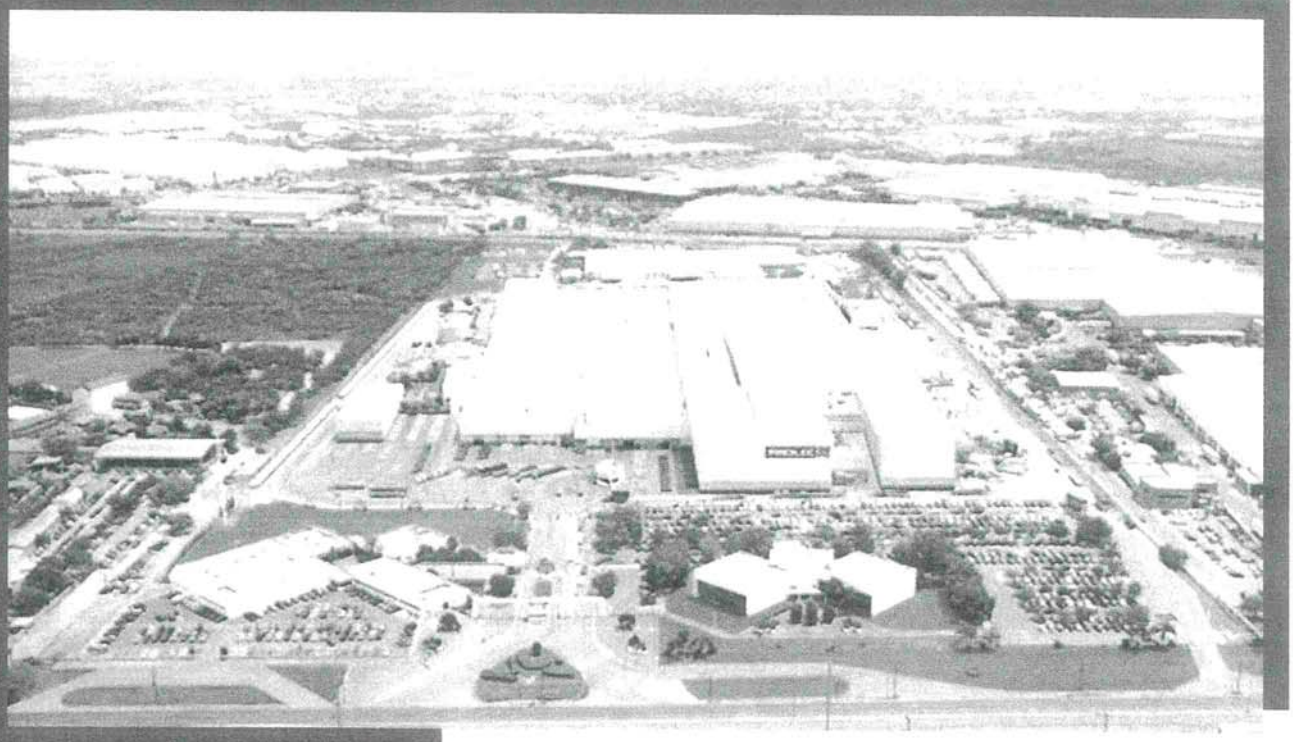

Graybar

CITY OF FREEMONT

GE Prolec Transformers Inc. Contact:
Morris, Jay
General Electric
Account Manager
Huron 57350 US

605-352-2093- Office
605-354-3377- Cell

JAY.MORRIS@GE.COM- E-mail

GE Proposal Number: 229007
GE Prolec Ref.: 229007 Rev: **0**

10-JUN-20

Table of Contents

2. Solution Descriptions and Pricing: 1
2.1. Pricing Notes 2
2.2. Spare Parts. 2
3. Required and Supplemental Documentation 2
4. Clarifications to Specification 3
4.1. General Comments 3
4.2. Technical Exceptions and Clarifications to the Specification 4
4.3. Commercial Exceptions and Clarifications to the Specification 4
5. General Terms and Conditions: 4
5.2. Consulting Services 5
5.3. Validity Period 5
5.4. Delivery Terms 5
5.4.1. Shipment 5
5.4.2. Storage 6
5.5. Payment Terms: ..... **Error! Bookmark not defined.**
5.6. Cancellation Charges ..... **Error! Bookmark not defined.**
6. Warranty ..... **Error! Bookmark not defined.**
7. Proposal letter revisions list ..... **Error! Bookmark not defined.**

This document contains proprietary and confidential information to GE-Prolec Transformers, Inc. Disclosure of this information to a third party is prohibited without prior written authorization of GE-Prolec Transformers Inc.

2. Solution Descriptions and Pricing:

Item	Description	Qty	Unit Price (U.S.D)
1A	Three phase, oil immersed, Substation Transformer, 15/20/25//28 MVA, ONAN/ONAF/ONAF/ONAF @ 65°C, 60 Hz, 55/65°C temperature rise, high voltage of 69 kV Delta connection with No Load Tap Changer, low voltage of 13.80 kV Wye connection with Load Tap Changer. -We are quoting these transformers EX Works (Incoterms 2010) Factory in Apodaca, N.L. México. Refer to section 5.4. -Dry Air Shipment.	2	$ 599,274.61E SALES TAX $44,949.22E
1A.T	Unit price adder to deliver this transformer DDP (Incoterms 2010) nearest the final destination in Fremont, NE US. Buyer shall provide, at its own expense, free and clear access to PGE and PGE's subcontractors for purposes of inspecting access routes to the delivery pad (if applicable). If such access is not allowed within thirty (30) days after execution or expedition of a binding Purchase Order, the quoted freight price shall be subject to applicable extra costs as necessary, according to PGE's subcontractor's inspections. Should PGE or its subcontractor deem it necessary to make modifications to access routes, or to use special equipment or maneuvers in order to perform proper delivery, Buyer shall make such modifications and/or bear the costs for any special equipment or maneuvers to be used. Upon arrival by GE Prolec or GE Prolec's subcontractors in charge of freight for delivery, the Purchaser shall promptly begin the applicable actions in order for proper delivery and reception to take place. If such actions are not started within 24 hours after arrival of the Products, the Purchaser shall hold GE Prolec harmless from and against any and all costs which GE Prolec might incur by reason of such delay, including but not limited to demurrage costs.	2	$ 25,979.00E SALES TAX $1,818.53E
1A.R	Unit price adder for off-loading and place on pad. For truck shipment. "Considering free and clear access to the substation pad" The price is valid if service is performed no later than three (3) months after the transformer shipment date. If performed later a price adjustment will apply.	2	$ 11,340.00E SALES TAX 793.80
1A.F	Unit price adder for field assembly, drying process, vacuum oil filling and field tests. -For Non Union Site: Union Labor is NOT considered in the scope. -The price is valid if service is performed no later than three (3) months after the transformer shipment date. If performed later a price adjustment will apply.	2	$ 42,886.00E SALES TAX 3,002.02E

GE Prolec Transformers Inc.
1223 Fairgrove Church Road, Conover, NC 28613
This document contains Proprietary and Confidential information to GE-Prolec Transformers, Inc. Disclosure of this information to a third party is prohibited without prior written authorization of GE-Prolec Transformers Inc.

2.1. Pricing Notes

- Prices are firm for shipments until 1Q, 2021
- Taxes are not included.

2.2. Spare Parts.

Cost of spare parts is not included in the unit price of the transformer. Maintaining spare parts in stock at Graybar's facility is not recommended. GE Prolec has provided the Prices for spare parts in the table below:

QTY	Description Note: It is important to store spare parts in a protected and dry area. Always place the "crate" with the spare part on a flat surface during handling and storage.	Price ITEM 1A (USD)
1	HV Bushing	$2,252.63
1	LV Bushing	$1,351.58
1	Neutral Bushing	$1,351.58
1	Set of Gaskets	$1,689.47
1	Fan	$1,013.68

3. Required and Supplemental Documentation

GE Prolec is providing the following items as Exhibits to this proposal. Please refer to the Exhibits section at the end of this document for these items:

Exhibit A - Preliminary Drawings

Exhibit B - Technical Proposal Information

Exhibit C - Paint Specification

Exhibit D - GE Prolec Standard Terms and Conditions

Exhibit E - Installation Services Information

Exhibit F - Submittals

This document contains Proprietary and Confidential information to GE-Prolec Transformers, Inc. Disclosure of this information to a third party is prohibited without prior written authorization of GE-Prolec Transformers Inc.

4. Clarifications to Specification

4.1. General Comments

Product Design, Manufacture and Testing—Product design, manufacture and testing conforms to ANSI, IEEE, NEMA, ASTM, OSHA, UBC STD and GE Prolec standards, as well as applicable customer specifications.

Quality Assurance Manual—GE Prolec is an ISO-9001 certified plant. Seller shall make its Quality Assurance Manual available for City of Fremont's review at the factory only. This manual will not be submitted for approval or audit.

Submittals—GE Prolec has provided a listing of submittal drawings and terms for these submittals in **Exhibit F – Submittals**.

Tools—No special tools are required for installation.

Testing—Site testing procedure will be provided at time of shipment in the form of an instruction manual. Transformers are tested according to ANSI Standard Test Code for Transformers C57.12.90. Short circuit tests or short circuit test reports are not included in this proposal.

Sweep Frequency Response Analysis test (SFRA) in the factory is included with our Doble M5200 equipment. If a SFRA in field is required, there is an adder of $10,000.

Witness Hold Points—There are no witness or hold points in the manufacturing process. It is acceptable for the customer agent to visit factory to inspect transformers or witness tests, provided the factory schedules and personnel are not affected or delayed. City of Fremont's agent is responsible for furnishing his own transportation, lodging and food expense. If City of Fremont would like to inspect the unit at any point during the manufacturing cycle, the factory will advise him within ten (10) days of the inspection point. It is City of Fremont's responsibility to be present at the appointed time. GE Prolec will not hold manufacture while waiting for the City of Fremont's representative.

Galvanized Steel Radiators – Radiators provided will be galvanized steel radiators. Galvanized steel radiators have a life expectancy of up to75 years and require less maintenance. Painted galvanized radiators are available only if required by City of Fremont and at an additional price.

Hot Oil Circulation – If the transformer is assembled during a temperature **below 10°C/50°F**, hot oil circulation will be required. Hot oil circulation is not included in the proposed assembly process. If hot oil circulation is required, there will be an additional charge for this service. **We estimate the price to be $20,000.00 USD but GE PROLEC will provide the actual price at the time the service is provided.**

This document contains Proprietary and Confidential information to GE-Prolec Transformers, Inc. Disclosure of this information to a third party is prohibited without prior written authorization of GE-Prolec Transformers Inc.

4.2. Technical Exceptions and Clarifications to the Specification

Specification Document	Requirement Number and Title	Exception / Clarification / Alternative	Comment
Contract for Purchase of Substation Transformers- May 2020	16	Clarification	We are using Ergon Hyvolt II or similar inhibited type II mineral oil
Contract for Purchase of Substation Transformers- May 2020	7.1	Clarification	We are using paperless (Netted) CTC in the low voltage winding.
Contract for Purchase of Substation Transformers- May 2020	12.7	Clarification	The Low Voltage tap winding is of helical construction and is wound on a separate cylinder. It is wound with two parallel sections which are tapped as required. The tapping arrangement is symmetrical about the magnetic and electrical center of the windings to ensure uniform voltage stresses and short circuit forces.
Contract for Purchase of Substation Transformers- May 2020	24	Clarification	Paint, finish & coating per GE Prolec Standard. Please send Spec

4.3. Commercial Exceptions and Clarifications to the Specification

Specification Document	Requirement Number and Title	Exception / Clarification / Alternative	Comment
City of Fremont Terms Apply	-		

5. General Terms and Conditions:

Liquidated Damages - Seller does not consider acceptance of any liquidated damages amount or rate for this proposal, unless if it is expressly negotiated and accepted between customer and seller.

5.1. Installation Services:

We have provided a separate proposal for installation services in Exhibit E - Installation Services Proposal. If the customer decides to purchase the installation services, please refer to Exhibit E - Installation Services Proposal.

This document contains Proprietary and Confidential information to GE-Prolec Transformers, Inc. Disclosure of this information to a third party is prohibited without prior written authorization of GE-Prolec Transformers Inc.

5.2. Consulting Services

If additional Technical Consulting service is desired by City of Fremont (at his option), for the supervision of receiving, installation and inspection. City of Fremont will be charged $1,500 per 8-hour day, plus travel expenses.

50% Premium over standard if required on overtime (pass 8 hour day) and Saturdays.

100% Premium over standard on Sundays and Holidays

5.3. Validity Period

This proposal will remain valid for a period of 60 days after submittal. If during this period we have an increment in the commodity (copper, silicon steel, oil and carbon steel) and transportation costs of more than 2%, then PROLEC GE will revise the price according to this percent of increment.

5.4. Delivery Terms

5.4.1. Shipment

1A

Our standard shipping estimate is 32-36 weeks after receipt of an order, which includes print approval. Our standard approval drawings will be mailed 14-16 weeks after receipt of the order. GE Prolec timing includes a customer review period of two (2) weeks including mailing time.

Actual shipment and drawing schedules will depend on factory backlog at the time of the purchase order acceptance. Shipment dates are approximate and are based upon prompt receipt of all necessary information from City of Fremont. Please contact the Factory if a shorter cycle is required.

The shipment estimate indicated above includes customer witness visits. The Project Manager will inform City of Fremont ten (10) days prior to specified dates for test witnessing. GE Prolec will perform the final test set and prepare for shipment and on-time delivery per contractual requirements, with or without confirmation of notification from customer. GE Prolec will submit a certified test report to City of Fremont.

The seller will determine point of origin of shipment, method of transportation, carrier and routing to the port described above.

GE values the relationship we are building with City of Fremont and hope to continue open communication and partnering towards a winning relationship. Given the ongoing and constantly changing status of the coronavirus around the world, including emerging governmental restrictions, GE wanted to assure City of Fremont that we are staying abreast of the situation across the globe. The impacts of coronavirus cannot reasonably be determined at this time; however, we will keep City of Fremont aware of any developments that may impact timing, schedules, pricing or other aspects of our open and pending proposals. While we do not propose to make changes now, our

This document contains Proprietary and Confidential information to GE-Prolec Transformers, Inc. Disclosure of this information to a third party is prohibited without prior written authorization of GE-Prolec Transformers Inc.

proposal did not consider the impacts of the coronavirus and may need to be adjusted; we will determine what (if any) changes we may need at the time of the award and will work with customer to ensure mutual agreement.

1A

If customer decides to buy the shipping option offered in Section 2, we will deliver these transformers DDP (INCOTERMS 2010) with freight allowed to common carrier delivery point nearest the final destination Fremont NE US .

Title Transfer and Risk of Loss will be transferred to City of Fremont on **DDP** point.

If City of Fremont specifies a manner or routing of shipment different from that determined by Seller, any additional expenses will be borne by City of Fremont.

City of Fremont shall bear complete responsibility for off-loading, any transportation beyond the delivery point, and installation of the transformer at the job site, unless City of Fremont chooses to purchase these options proposed on **Section 2** of this proposal.

Disclaimer for Transportation

If the transformer is subjected to impacts during transportation, the Seller reserves the right to assess/evaluate any potential damage by visual inspection and field tests including, but not limited to, megger, ratio, power factor and FRA. No single test, by itself, will be used to reach a conclusion.

A three-way impact recorder will be provided for shipment. Impact recorder must be returned to GE Prolec (using our UPS account for shipping expenses) within 60 days of delivery. A penalty charge of $2,000 USD will apply if not returned in that period of time.

5.4.2. Storage

Storage, if necessary, will be at the risk and expense of City of Fremont. Contract changes shall apply accordingly to reflect new INCOTERMS delivery condition.

This document contains Proprietary and Confidential information to GE-Prolec Transformers, Inc. Disclosure of this information to a third party is prohibited without prior written authorization of GE-Prolec Transformers Inc.

5 year experience List

LAST_SHIP_YEAR	SERIAL_NO	QTY	CUSTOMER	ENDUSER	SHIP_COUNTRY	SHIP_STATE	APPLICATION	TEMP_RISE	MVA_ONAN	ONAF1	ONAF2	HVKV	LVKV	TERKV	CONNECTION	HVBIL	LVBIL	LTC	DETC
2013	G2119	5	INVENERGY LLC	INVENERGY LLC	US	TX	COLLECTOR STEP UP	65	100	133	165	138	34.5	13.8	Y-Y	650	200	NO	AT
2013	G2383	12	DUKE ENERGY CORPORATION	PROGRESS ENERGY CAROLINA	US	FL	SUBSTATION	55/65	30	40	50	69	13.09	0	D-Y	350	110	LV	AT
2013	G2510	9	DUKE ENERGY CORPORATION	PROGRESS ENERGY FLORIDA	US	FL	AUTO	55/65	200	266.66	333.33	512	230	13.8	Y-Y	1550	900	HV	NO
2013	G2554	4	DUKE ENERGY CORPORATION	PROGRESS ENERGY CAROLINA	US	NC	GENERATOR STEP UP	65	27.5	0	0	115	13.2	0	Y-D	550	150	NO	AT
2013	G2580	4	DUKE ENERGY CORPORATION	PROGRESS ENERGY CAROLINA	US	NC	SUBSTATION	55/65	24	32	40	115	24	0	D-Y	550	150	NO	AT
2013	G2614	8	DASHIELL, LLC	DASHIELL, LLC	US	TX	SUBSTATION	55/65	37.5	50	62.5	138	12.47	0	D-Y	550	110	NO	AT
2013	G2625	4	DUKE ENERGY CORPORATION	PROGRESS ENERGY CAROLINA	US	NC	SUBSTATION	55/65	15	20	25	115	24	0	D-Y	550	150	NO	AT
2013	G2695	2	OG&E CENTRAL DISTR STORE	OKLAHOMA GAS & ELECTRIC	US	OK	AUTO	55/65	240	320	400	345	138	13.8	Y-Y	1050	650	NO	AT
2013	G2774	2	OG&E CENTRAL DISTR STORE	OKLAHOMA GAS & ELECTRIC	US	OK	AUTO	55/65	240	320	400	345	138	13.8	Y-Y	1050	650	NO	AT
2013	G2784	2	WESTAR ENERGY	WESTAR ENERGY	US	KS	AUTO	65	240	320	400	345	142	13.8	Y-Y	1050	550	LV	AT
2013	G2789	2	OG&E CENTRAL DISTR STORE	OKLAHOMA GAS & ELECTRIC	US	OK	SUBSTATION	55/65	30	40	50	138	36.2	0	D-Y	550	200	LV	AT
2013	G2795	3	OG&E CENTRAL DISTR STORE	OKLAHOMA GAS & ELECTRIC	US	OK	SUBSTATION	55/65	7.5	9.38	10.5	69	13.09	0	D-Y	350	110	LV	AT
2013	G2796	6	TEXAS ELECTRIC COOPERATIVE	BRAZOS ELECTRIC COOP.	US	TX	SUBSTATION	65	30	40	50	134	26.4	0	D-Y	550	150	LV	AT
2013	G2799	4	DOMINION VIRGINIA POWER	DOMINION VIRGINIA POWER	US	VA	SUBSTATION	65	13.44	17.92	22.4	115	13.2	0	D-Y	550	110	NO	AT
2013	G2800	1	CALVERT CLIFFS NUCLEAR P	CONSTELLATION ENERGY	US	MD	SUBSTATION	65	60	80	100	500	14	0	Y-Y	1425	110	NO	AT
2013	G2801	2	CALVERT CLIFFS NUCLEAR P	CONSTELLATION ENERGY	US	MD	SUBSTATION	65	12	16	20	13.8	4.16	0	D-Y	110	75	NO	AT
2013	G2822	2	OG&E CENTRAL DISTR STORE	OKLAHOMA GAS & ELECTRIC	US	OK	SUBSTATION	55/65	12	16	20	161	13.09	0	D-Y	650	110	LV	AT
2013	G2831	9	DOMINION VIRGINIA POWER	DOMINION VIRGINIA POWER	US	VA	SUBSTATION	65	50.4	67.2	84	230	36.5	0	D-Y	900	200	LV	NO
2013	G2868	1	DOMINION VIRGINIA POWER	DOMINION VIRGINIA POWER	US	VA	AUTO	65	112	0	0	138	115	13.2	Y-Y	650	550	NO	AT
2013	G2870	2	RENEWABLE ENERGY SYSTEMS	RES	US	KS	COLLECTOR STEP UP	65	87	116	145	345	34.5	13.2	Y-Y	1050	200	HV	NO
2013	G2879	2	DOMINION VIRGINIA POWER	DOMINION VIRGINIA POWER	US	VA	SUBSTATION	65	20.16	26.88	33.6	115	36.5	0	D-Y	550	200	LV	NO
2013	G2881	1	CENTRAL MAINE POWER CO	IBERDROLA USA	US	ME	SUBSTATION	55/65	10	12.5	0	120	13.2	7.62	Y-Y	450	110	LV	AT
2013	G2882	1	CENTRAL MAINE POWER CO	IBERDROLA USA	US	ME	SUBSTATION	55/65	20	26.67	33.33	120	36	0	D-Y	450	200	LV	AT
2013	G2883	1	DUKE ENERGY CORPORATION	PROGRESS ENERGY CAROLINA	US	FL	SUBSTATION	55/65	18	24	30	115	13.09	0	D-Y	550	110	LV	AT
2013	G2885	1	KANSAS CITY PR AND LT CO	KANSAS CITY POWER & LIGHT	US	MO	SUBSTATION	55/65	8	10	12	13.2	2.4	0	Y-D	150	95	NO	AT
2013	G2887	1	EL PASO ELECTRIC CO	EL PASO ELECTRIC CO	US	TX	SUBSTATION	55/65	18	24	30	115	13.8	0	D-Y	450	150	NO	AT
2013	G2889	3	DUKE ENERGY CORPORATION	PROGRESS ENERGY CAROLINA	US	NC	SUBSTATION	55/65	15	20	25	230	24	0	D-Y	900	150	NO	AT
2013	G2893	3	ABB INC	AEP	US	TX	STATIC VAR COMPESATOR	65	180	240	300	345	20	0	Y-D	1050	200	NO	NO
2013	G2894	3	ABB INC	AEP	US	TX	STATIC VAR COMPESATOR	65	60	80	100	138	19.5	0	Y-D	650	200	NO	NO
2013	G2902	2	DOMINION VIRGINIA POWER	DOMINION VIRGINIA POWER	US	VA	SUBSTATION	65	50.4	67.2	84	230	36.5	0	D-Y	900	200	HV	NO
2013	G2907	2	DOMINION VIRGINIA POWER	DOMINION VIRGINIA POWER	US	NC	AUTO	65	100.8	134.4	168	230	115	13.2	Y-Y	900	550	LV	NO
2013	G2908	2	DOMINION VIRGINIA POWER	DOMINION VIRGINIA POWER	US	VA	AUTO	65	134.4	179.2	224	230	115	13.2	Y-Y	900	550	LV	NO
2013	G2913	5	PUBLIC SERVICE ELECTRIC & GAS	PUBLIC SERVICE ELECTRIC & GAS	US	NJ	SUBSTATION	65	10.25	13.65	17	69	4.37	0	D-Y	350	95	NO	AT
2013	G2916	2	TEXAS ELECTRIC COOPERATIVE	PEDERNALES EC	US	TX	SUBSTATION	55/65	25	33.3	41.7	138	26.18	0	D-Y	650	150	LV	AT
2013	G2918	3	DOMINION VIRGINIA POWER	DOMINION VIRGINIA POWER	US	VA	SUBSTATION	65	50.4	68.3	84	230	36.5	13.2	Y-Y	900	200	LV	AT
2013	G2920	4	OG&E CENTRAL DISTR STORE	OKLAHOMA GAS & ELECTRIC	US	OK	SUBSTATION	55/65	7.5	9.38	10.5	138	13.09	0	D-Y	550	110	LV	AT
2013	G2930	7	PUBLIC SERVICE ELECTRIC & GAS	PUBLIC SERVICE ELECTRIC & GAS	US	NJ	SUBSTATION	65	27	36	45	230 x 138	13.8	0	D-Y	900	200	LV	NO
2013	G2934	1	ANIXTER POWER SOLUTIONS	GUADALUPE VALLEY EC	US	TX	SUBSTATION	55/65	12	16	20	138 x 69	26.18	0	D-Y	650	150	LV	AT
2013	G2936	1	NRG ENERGY, INC	SARGENT & LUNDY	US	PA	GENERATOR STEP UP	65	336	0	0	232	15.5	0	Y-D	825	110	NO	AT
2013	G2937	3	DOMINION VIRGINIA POWER	DOMINION VIRGINIA POWER	US	NC	SUBSTATION	65	20.16	26.88	33.6	230	36.5	0	D-Y	900	200	LV	NO
2013	G2939	1	PACIFICORP	PACIFICORP	US	WY	GENERATOR STEP UP	65	242	323	403	236	22	0	Y-D	750	150	NO	AT
2013	G2943	2	ARCHER DANIEL MIDLAND CO.	ARCHER DANIEL MIDLAND CO.	US	IL	SUBSTATION	55/65	40	53.3	66.67	69	13.8	0	D-Y	350	110	NO	AT
2013	G2944	2	ARCHER DANIEL MIDLAND CO.	ARCHER DANIEL MIDLAND CO.	US	IL	SUBSTATION	55/65	64	85.33	106.67	138	69	13.8	Y-Y	550	350	LV	AT
2013	G2947	1	TEXAS ELECTRIC COOPERATIVE	SHARYLAND UTILITIES	US	TX	SUBSTATION	55/65	12	16	20	69	4.94 x 12.4	0	D-Y	350	150	LV	AT
2013	G2954	2	ARCHER DANIEL MIDLAND CO.	ARCHER DANIEL MIDLAND CO.	US	IL	AUTO	55/65	64	85.3	106.7	138	34.5	13.09	Y-Y	550	200	LV	AT
2013	G2957	4	TAMPA ELECTRIC COMPANY	TAMPA ELECTRIC	US	FL	SUBSTATION	65	22.4	29.87	37.3	68.8	13.8	0	D-Y	350	110	LV	AT
2013	G2958	5	TAMPA ELECTRIC COMPANY	TAMPA ELECTRIC	US	FL	SUBSTATION	65	16.8	22.4	28	68.8	13.8	0	D-Y	350	110	LV	AT
2013	G2959	1	DUKE ENERGY CORPORATION	DUKE ENERGY CORPORATION	US	IN	AUTO	65	90	120	150	230	69	13.8	Y-Y	900	350	NO	AT
2013	G2964	1	NEW PAGE CORPORATION	NEW PAGE CORPORATION	US	WI	SUBSTATION	55/65	50	66.67	83.3	115	46	13.8	Y-Y	550	250	NO	AT
2013	G2965	1	NRG TEXAS LP	NRG ENERGY	US	TX	GENERATOR STEP UP	65	69	92	115	138	13.8	0	Y-D	650	110	HV	AT
2013	G2967	1	ORLANDO UTILITIES COMMISSION	ORLANDO UTILITIES COMMISSION	US	FL	SUBSTATION	55/65	20	26.6	33.3	67	24.94	0	D-Y	350	150	LV	AT
2013	G2970	3	DUKE ENERGY CORPORATION	PROGRESS ENERGY CAROLINA	US	FL	SUBSTATION	55/65	18	24	30	69	13.09	0	D-Y	350	110	LV	AT
2013	G2972	3	OG&E CENTRAL DISTR STORE	OKLAHOMA GAS & ELECTRIC	US	OK	SUBSTATION	55/65	7.5	9.37	10.5	138	26.18	0	D-Y	550	150	LV	AT
2013	G2973	2	ANIXTER POWER SOLUTIONS	MIDMAR GAS PLANT	US	TX	SUBSTATION	55/65	24	32	40	138	4.16	0	D-Y	550	110	NO	AT
2013	G2974	1	ANIXTER POWER SOLUTIONS	MIDMAR GAS PLANT	US	TX	SUBSTATION	55/65	15	20	25	138	21.6	0	D-Y	550	150	LV	AT
2013	G2975	1	AMERICAN ELECTRIC POWER	AMERICAN ELECTRIC POWER	US	OK	AUTO	65	270	360	450	230	141.45	13.8	Y-Y	825	650	NO	AT
2013	G2978	2	DOMINION VIRGINIA POWER	DOMINION VIRGINIA POWER	US	VA	SUBSTATION	65	24	32	40	115	13.2	0	D-Y	550	110	LV	NO
2013	G2981	1	DUKE ENERGY CORPORATION	DUKE ENERGY CORPORATION	US	IN	AUTO	65	60	80	100	230	69	13.8	Y-Y	900	350	NO	AT
2013	G2990	1	AMERICAN ELECTRIC POWER	AMERICAN ELECTRIC POWER	US	AR	AUTO	65	405	540	675	345	161	13.8	Y-Y	1050	750	NO	AT
2013	G2997	1	TESORO NORTHWEST COMPANY	TESORO NORTHWEST COMPANY	US	CA	SUBSTATION	55/65	20	26.67	33.33	34.5	13.8 x 13.8	0	D-Y	200	110	LV	AT
2013	G2998	2	DOMINION VIRGINIA POWER	DOMINION VIRGINIA POWER	US	VA	SUBSTATION	65	13.44	17.92	22.4	115	13.2	0	D-Y	550	110	NO	AT
2013	G2999	3	DOMINION VIRGINIA POWER	DOMINION VIRGINIA POWER	US	VA	AUTO	65	20.16	26.88	33.6	34.4	13.2	0	Y-Y	200	110	NO	AT

2013	G3003	1	NORTHWESTERN ENERGY	NORTHWESTERN ENERGY	US	MT	SUBSTATION	65	25	33	42	102	13.08	0	D-Y	450	110	LV	AT
2013	G3004	1	KENTUCKY UTILITIES CO	KENTUCKY UTILITIES	US	KY	AUTO	55/65	120	160	200	345	138	0	Y-Y	900	550	NO	AT
2013	G3005	1	DOMINION VIRGINIA POWER	DOMINION VIRGINIA POWER	US	VA	SUBSTATION	65	13.44	17.92	22.4	115	36.5	0	D-Y	550	200	NO	AT
2013	G3006	1	KANSAS CITY PR AND LT CO	KANSAS CITY POWER & LIGHT	US	MO	SUBSTATION	65	80	100	125	161	69	0	D-Y	650	350	LV	AT
2013	G3007	1	AKZO NOBEL FUNCTIONAL CH	AKZO NOBEL FUNCTIONAL CH	US	AL	SUBSTATION	55/65	15	20	25	115	12.5	0	Y-D	550	110	NO	AT
2013	G3009	1	KANSAS CITY PR AND LT CO	CUMMINS ELECTRIC	US	MO	SUBSTATION	65	30	40	50	161	69	0	D-Y	650	350	LV	AT
2013	G3012	1	BIG RIVERS ELECTRIC CORP	BIG RIVERS ELECTRIC CORP	US	KY	AUTO	55/65	27	36	45	161	69	4.16	Y-Y	650	350	LV	AT
2013	G3013	1	DELMARVA POWER & LIGHT C	PEPCO HOLDINGS	US	DE	SUBSTATION	65	22.5	30	37.5	138	12.47	0	D-Y	550	110	LV	AT
2013	G3014	2	DASHIELL, LLC	DASHIELL, LLC	US	TX	SUBSTATION	55/65	15	20	25	34.5	4.16	0	D-Y	200	60	NO	AT
2013	G3015	2	DASHIELL, LLC	DASHIELL, LLC	US	TX	SUBSTATION	55/65	40	53.2	66.5	138	25	0	D-Y	550	200	NO	AT
2013	G3016	1	GREAT RIVER ENERGY	GREAT RIVER ENERGY	US	ND	AUTO	65	84	112	140	236	118	12.8	Y-Y	825	450	NO	AT
2013	G3017	4	MITSUBISHI ELEC PWR PROD	FIRSTENERGY	US	PA	STATIC VAR COMPESATOR	65	50	67	83	230	25	0	Y-D	750	200	NO	NO
2013	G3018	1	NORTHEAST UTILITIES	NORTHEAST UTILITIES	US	CT	AUTO	65	40	53	67	115	69	13.8	Y-Y	450	350	HV	NO
2013	G3022	2	BLUEGRASS POWER CONSTRUCTORS	LOUISVILLE GAS & ELECTRIC	US	KY	GENERATOR STEP UP	65	165	220	275	138	18	0	Y-D	650	150	NO	AT
2013	G3023	2	BLUEGRASS POWER CONSTRUCTORS	LOUISVILLE GAS & ELECTRIC	US	KY	GENERATOR STEP UP	65	183	244	305	138	18	0	Y-D	650	150	NO	AT
2013	G3024	1	WEYERHAEUSER	STANTEC	US	NC	GENERATOR STEP UP	55/65	30	40	50	115	13.8	0	D-Y	450	110	LV	AT
2013	G3029	3	TEXAS ELECTRIC COOPERATIVE	BRAZOS ELECTRIC COOP.	US	TX	SUBSTATION	65	30	40	50	134	26.4	0	D-Y	550	150	LV	AT
2013	G3030	2	DOMINION VIRGINIA POWER	DOMINION VIRGINIA POWER	US	VA	SUBSTATION	65	33.6	44.8	56	115	36.5	0	D-Y	550	200	LV	AT
2013	G3031	2	DUKE ENERGY CORPORATION	PROGRESS ENERGY FLORIDA	US	FL	SUBSTATION	65	24	32	40	21	4.16	0	D-Y	150	110	NO	AT
2013	G3032	2	BLUEGRASS POWER CONSTRUCTORS	BLACK & VEATCH	US	KY	SUBSTATION	65	28.8	38.4	48	18	6.9	0	D-Y	150	95	NO	AT
2013	G3033	1	POWDER RIVER ENERGY CORP	POWDER RIVER ENERGY	US	WY	AUTO	65	60	80	100	230	69	13.2	Y-Y	900	350	LV	AT
2013	G3038	1	PACIFICORP	PACIFICORP	US	UT	SUBSTATION	65	11.2	14	0	67	24.94	0	D-Y	350	150	NO	AT
2013	G3041	1	DOMINION VIRGINIA POWER	DOMINION VIRGINIA POWER	US	VA	SUBSTATION	65	33.6	44.8	56	230 x 115	24	0	D-Y	900	150	LV	NO
2013	G3042	2	DOMINION VIRGINIA POWER	DOMINION VIRGINIA POWER	US	NC	SUBSTATION	65	13.44	17.92	22.4	115	13.2	0	D-Y	550	110	NO	AT
2013	G3045	1	DUKE ENERGY CORPORATION	DUKE ENERGY CORPORATION	US	NC	SUBSTATION	55/65	15	20	25	115	34.5	0	D-Y	550	200	NO	AT
2013	G3050	2	KANSAS CITY PR AND LT CO	KANSAS CITY POWER & LIGHT	US	MO	AUTO	65	390	520	650	345	161	13.8	Y-Y	1050	750	NO	AT
2013	G3051	1	DOMINION VIRGINIA POWER	DOMINION VIRGINIA POWER	US	VA	SUBSTATION	65	20.16	26.88	33.6	115	24	0	D-Y	550	150	LV	AT
2013	G3054	1	BLACK HILLS POWER	BLACK HILLS POWER	US	WY	GENERATOR STEP UP	65	37.5	50	0	115	13.8	0	Y-D	550	110	NO	AT
2013	G3057	4	ABB INC	FIRSTENERGY	US	VA	STATIC VAR COMPESATOR	65	100	133.33	166.66	500	28	0	Y-D	1550	200	NO	NO
2013	G3063	1	ENERGY PARTS SOLUTIONS, LLC	ENERGY PARTS SOLUTIONS, LLC	US	MO	SUBSTATION	55/65	15	20	25	115	13.2	0	D-Y	550	110	LV	NO
2013	G3067	1	DASHIELL, LLC	DASHIELL, LLC	US	TX	SUBSTATION	55/65	20	26.66	33.33	138	12.47	0	D-Y	550	110	NO	AT
2013	G3081	1	EMERA MAINE	MAINE PUBLIC SERVICE	US	ME	SUBSTATION	65	60	80	100	138	69	12.47	Y-Y	550	350	LV	NO
2013	G3086	1	ANIXTER POWER SOLUTIONS	HABERSHAM EMC	US	NC	SUBSTATION	55/65	30	40	50	115	24.94	0	D-Y	550	150	NO	AT
2013	G3098	2	DASHIELL, LLC	DASHIELL, LLC	US	TX	SUBSTATION	55/65	50	66.5	83.1	138	34.5	0	D-Y	550	200	NO	AT
2013	G3104	1	WESCO DISTRIBUTION INC	KENTUCKY UTILITIES	US	KY	SUBSTATION	65	40	53.33	66.66	138	13.8	0	D-Y	650	110	NO	AT
2014	G2517	7	DUKE ENERGY CORPORATION	PROGRESS ENERGY CAROLINA	US	NC	SUBSTATION	55/65	24	32	40	230	24	0	D-Y	900	150	NO	AT
2014	G2550	4	GEXPRO	GEXPRO	US	CA	SUBSTATION	55/65	15	20	22.4	115	12.47	0	D-Y	550	110	NO	AT
2014	G2664	2	DUKE ENERGY CORPORATION	PROGRESS ENERGY CAROLINA	US	NC	SUBSTATION	55/65	18	24	30	115	13.09	0	D-Y	550	110	LV	AT
2014	G2687	3	ENERGY PARTS SOLUTIONS, LLC	ENERGY PARTS SOLUTIONS, LLC	US	MO	GENERATOR STEP UP	65	60	80	100	138 x 69	13.8	0	Y-D	650	150	NO	AT
2014	G2739	4	TEXAS ELECTRIC COOPERATI	CENTRAL VALLEY ELECTRIC COOPERATIVE	US	NM	SUBSTATION	55/65	24	32	40	115 x 67	12.47	0	D-Y	550	110	LV	AT
2014	G2761	2	DUKE ENERGY CORPORATION	PROGRESS ENERGY CAROLINA	US	NC	SUBSTATION	55/65	15	20	25	115	13.09	0	D-Y	550	110	NO	AT
2014	G2777	2	JW POWERLINE CONSTRUCTIO	JW POWERLINE	US	TX	SUBSTATION	55/65	18	24	30	138	24.9	0	D-Y	650	150	LV	AT
2014	G2788	24	OG&E CENTRAL DISTR STORE	OKLAHOMA GAS & ELECTRIC	US	OK	SUBSTATION	55/65	12	16	20	138	13.09	0	D-Y	550	110	LV	AT
2014	G2851	1	WESTAR ENERGY	WESTAR ENERGY	US	KS	SUBSTATION	65	36	48	60	26	14.4	0	D-Y	200	110	NO	AT
2014	G2892	2	PACIFICORP	PACIFICORP	US	WY	GENERATOR STEP UP	65	348	464	580	345	22	0	Y-D	1050	150	NO	AT
2014	G2896	8	WESTERN FARMERS EC	WESTERN FARMERS EC	US	OK	SUBSTATION	55/65	12	16	20	138	26.4	0	D-Y	650	150	LV	AT
2014	G2906	4	REYNOLDS CO INC	REYNOLDS CO INC	US	TX	SUBSTATION	55/65	40	50	60	138	12.47	0	D-Y	650	110	NO	AT
2014	G2919	2	DOMINION VIRGINIA POWER	DOMINION VIRGINIA POWER	US	VA	SUBSTATION	65	20.16	26.88	33.6	230	13.2	0	D-Y	900	110	LV	NO
2014	G2938	7	AMERICAN ELECTRIC POWER	AMERICAN ELECTRIC POWER	US	IN	AUTO	65	405	540	675	345	138	34.5	Y-Y	1050	650	NO	AT
2014	G2946	12	TEXAS ELECTRIC COOPERATIVE	SHARYLAND UTILITIES	US	TX	SUBSTATION	55/65	30	40	50	138	24.94	0	D-Y	650	150	LV	AT
2014	G2950	3	OG&E CENTRAL DISTR STORE	OKLAHOMA GAS & ELECTRIC	US	OK	AUTO	55/65	60	80	100	138	69	13.2	Y-Y	550	350	NO	AT
2014	G2985	3	DUKE ENERGY CORPORATION	PROGRESS ENERGY CAROLINA	US	FL	SUBSTATION	55/65	30	40	50	115	13.09	0	D-Y	550	110	LV	AT
2014	G3040	3	SABER POWER SERVICES LLC	SABER POWER SERVICES LLC	US	TX	SUBSTATION	55/65	40	53.33	66.67	138	25	0	D-Y	550	150	NO	AT
2014	G3043	2	CONSUMERS ENERGY COMPANY	CONSUMERS ENERGY	US	MI	SUBSTATION	65	30	40	0	18	6.9	0	D-Y	150	110	NO	AT
2014	G3044	1	CONSUMERS ENERGY COMPANY	CONSUMERS ENERGY	US	MI	SUBSTATION	65	60	80	0	138	6.9	3.984	Y-Y	550	110	NO	AT
2014	G3046	4	DUKE ENERGY CORPORATION	DUKE ENERGY	US	FL	SUBSTATION	55/65	18	24	30	69	13.09	0	D-Y	350	110	LV	AT
2014	G3047	2	OG&E CENTRAL DISTR STORE	OKLAHOMA GAS & ELECTRIC	US	OK	AUTO	55/65	240	320	400	345	138	13.8	Y-Y	1050	650	NO	AT
2014	G3053	2	CHEYENNE LIGHT FUEL AND	BLACK HILLS POWER	US	WY	GENERATOR STEP UP	65	75	100	125	115	13.8	0	Y-D	550	110	NO	AT
2014	G3055	2	DUKE ENERGY CORPORATION	DUKE ENERGY CORPORATION	US	NC	AUTO	55/65	180	240	300	230	115	13.8	Y-Y	900	550	NO	AT
2014	G3056	4	ABB INC	FIRSTENERGY	US	VA	STATIC VAR COMPESATOR	65	120	160	200	500	33.1	0	Y-D	1550	250	NO	NO
2014	G3057	4	ABB INC	FIRSTENERGY	US	VA	STATIC VAR COMPESATOR	65	100	133.33	166.66	500	28	0	Y-D	1550	200	NO	NO
2014	G3065	3	DOMINION VIRGINIA POWER	DOMINION VIRGINIA POWER	US	VA	SUBSTATION	65	11.2	14	0	34.5	13.2	0	D-Y	200	110	NO	AT
2014	G3068	3	DOMINION VIRGINIA POWER	DOMINION VIRGINIA POWER	US	VA	SUBSTATION	65	34.2	45.6	57	21	6.9	0	D-Y	150	110	NO	AT

2016	G3629	1	TEXAS ELECTRIC COOPERATIVE	PRIORITY POWER MANAGEMENT	US	TX	SUBSTATION	55/65	15	20	25	138	24.94	0	D-Y	650	150	LV	AT
2016	G3633	1	BLACK HILLS POWER	BLACK HILLS POWER	US	CO	GENERATOR STEP UP	65	75	100	125	115	13.8	0	Y-D	550	110	NO	AT
2016	G3634	1	ISOLUX-TVIG HW, LLC	ISOLUX-TVIG HW, LLC	US	TX	COLLECTOR STEP UP	65	100	133	165	345	34.5	13.8	Y-Y	1050	200	HV	NO
2016	G3636	1	TUCSON ELECTRIC POWER CO	TUCSON ELECTRIC POWER CO	US	AZ	AUTO	55/65	90	120	150	138	46	13.27	Y-Y	650	250	LV	NO
2016	G3637	2	AUBREY SILVEY	AUBREY SILVEY	US	LA	SUBSTATION	55/65	60	67	80	230	13.8	0	D-Y	750	110	NO	AT
2016	G3638	1	HEARTLAND REMC	HEARTLAND REMC	US	IN	SUBSTATION	55/65	12	16	20	69	12.47	0	D-Y	350	110	NO	AT
2016	G3639	1	WESTERN FARMERS EC	WESTERN FARMERS EC	US	OK	AUTO	55/65	37.5	50	62.5	138	69	13.8	Y-Y	650	350	NO	AT
2016	G3640	1	MONTANA-DAKOTA UTILITIES	MONTANA DAKOTA UTILITIES	US	ND	SUBSTATION	65	25	33.33	41.66	235.75	34.5	0	D-Y	825	200	LV	AT
2016	G3643	1	BORDER STATES	SOUTH MISSISSIPPI EPA	US	MS	AUTO	55/65	60	80	100	161	69	13.8	Y-Y	650	350	LV	AT
2016	G3648	1	NORTHWESTERN ENERGY	NORTHWESTERN ENERGY	US	MT	AUTO	65	45	60	75	161	100	14.4	Y-Y	750	550	NO	AT
2016	G3650	2	OG&E CENTRAL DISTR STORE	OKLAHOMA GAS & ELECTRIC	US	OK	SUBSTATION	55/65	7.5	9.37	10.5	69	4.36	0	D-Y	350	95	NO	AT
2016	G3652	1	TUCSON ELECTRIC POWER CO	TUCSON ELECTRIC POWER CO	US	AZ	SUBSTATION	55/65	51	67.2	84	138	13.8	0	D-Y	650	110	LV	AT
2016	G3664	1	AIR PRODUCTS & CHEMICALS	AIR PRODUCTS & CHEMICALS	US	TX	SUBSTATION	55/65	10	12.5	0	138	4.16	0	D-Y	550	75	NO	AT
2016	G3665	1	AIR PRODUCTS & CHEMICALS	AIR PRODUCTS & CHEMICALS	US	TX	SUBSTATION	55/65	15	20	0	138	12.47	0	D-Y	550	110	NO	AT
2016	G3666	1	AIR PRODUCTS & CHEMICALS	AIR PRODUCTS & CHEMICALS	US	TX	SUBSTATION	55/65	33	44	0	138	13.8	0	D-Y	550	110	NO	AT
2016	G3667	4	ENERGY PARTS SOLUTIONS, LLC	ENERGY PARTS SOLUTIONS, LLC	US	TX	GENERATOR STEP UP	65	45	60	75	132	11.5	0	Y-D	550	110	NO	AT
2016	G3668	1	REYNOLDS CO INC	REYNOLDS CO INC	US	TX	SUBSTATION	65	20	26.67	33.33	138	13.2	0	D-Y	650	110	LV	AT
2016	G3669	1	AIR PRODUCTS & CHEMICALS	AIR PRODUCTS & CHEMICALS	US	TX	SUBSTATION	55/65	40	53.2	0	138	13.8	0	D-Y	550	110	NO	AT
2016	G3672	1	GEXPRO	GEXPRO	US	TX	SUBSTATION	65	37.5	50	62.5	115	13.8	0	D-Y	550	150	NO	AT
2016	G3675	1	TEXAS ELECTRIC COOPERATIVE	FARMERS ELECTRIC COOPERATIVE	US	TX	SUBSTATION	55/65	15	20	25	134	24.9	0	D-Y	550	150	LV	AT
2017	G3135	10	DUKE ENERGY CORPORATION	DUKE ENERGY CORPORATION	US	NC	SUBSTATION	55/65	15	20	25	115	24	0	D-Y	550	150	NO	AT
2017	G3143	8	DUKE ENERGY CORPORATION	DUKE ENERGY CORPORATION	US	NC	SUBSTATION	55/65	15	20	25	230	24	0	D-Y	900	150	NO	AT
2017	G3144	2	DUKE ENERGY CORPORATION	PROGRESS ENERGY FLORIDA	US	FL	SUBSTATION	55/65	12	16	20	69	13.09	0	D-Y	350	110	LV	AT
2017	G3283	5	PUBLIC SERVICE ELECTRIC & GAS	DASHIELL, LLC	US	NJ	SUBSTATION	65	9	12	15	26.4	4.37	0	D-Y	200	95	NO	AT
2017	G3299	4	DOMINION VIRGINIA POWER	DOMINION VIRGINIA POWER	US	VA	SUBSTATION	55/65	18	24	30	34.4	4.16	0	D-Y	200	110	LV	AT
2017	G3367	1	EL PASO ELECTRIC CO	EL PASO ELECTRIC CO	US	TX	AUTO	55/65	120	160	200	345	115.5	13.8	Y-Y	1050	450	NO	AT
2017	G3397	6	TEXAS ELECTRIC COOPERATIVE	BRAZOS ELECTRIC COOP.	US	TX	SUBSTATION	65	12	16	20	134	13.2 x 26.4	0	D-Y	550	150	LV	AT
2017	G3410	12	OG&E CENTRAL DISTR STORE	OKLAHOMA GAS & ELECTRIC	US	OK	SUBSTATION	55/65	12	16	20	138	13.09	0	D-Y	550	110	LV	AT
2017	G3458	2	PUBLIC SERVICE ELECTRIC & GAS	PUBLIC SERVICE ELECTRIC & GAS	US	NJ	SUBSTATION	65	27	36	45	230	13.8	0	D-Y	900	150	LV	AT
2017	G3481	3	ANIXTER POWER SOLUTIONS	CITY OF ROCK HILL	US	SC	SUBSTATION	55/65	30	40	50	108	24.94	0	D-Y	550	150	NO	AT
2017	G3483	2	DASHIELL, LLC	DASHIELL, LLC	US	TX	COLLECTOR STEP UP	65	94.8	126.4	158	138	34.5	13.2	Y-Y	550	200	HV	NO
2017	G3502	5	DUKE ENERGY CORPORATION	DUKE ENERGY CORPORATION	US	FL	AUTO	55/65	180	240	300	230	115	13.8	Y-Y	900	550	LV	AT
2017	G3511	2	PROENERGY SERVICES	ENERGY PARTS SOLUTIONS, LLC	US	TX	GENERATOR STEP UP	65	138	184	230	230	18	0	Y-D	900	150	NO	AT
2017	G3518	2	DUKE ENERGY CORPORATION	PROGRESS ENERGY FLORIDA	US	FL	SUBSTATION	55/65	30	40	50	115	13.09	0	D-Y	550	110	LV	AT
2017	G3522	3	MAYER ELECTRIC SUPPLY CO	CITY OF DOTHAN	US	AL	SUBSTATION	55/65	20	26	33	115	13.2	0	D-Y	550	110	NO	AT
2017	G3551	2	BLACK HILLS POWER	BLACK HILLS POWER	US	CO	COLLECTOR STEP UP	65	42	56	70	115	34.5	13.8	Y-Y	550	200	NO	AT
2017	G3571	1	PUBLIC SERVICE ELECTRIC & GAS	PUBLIC SERVICE ELECTRIC & GAS	US	NJ	SUBSTATION	65	27	36	45	69	13.8	0	D-Y	350	150	LV	AT
2017	G3572	1	PUBLIC SERVICE ELECTRIC & GAS	PUBLIC SERVICE ELECTRIC & GAS	US	NJ	SUBSTATION	65	27	36	45	69	13.8	0	D-Y	350	150	LV	AT
2017	G3573	2	VAUGHN INDUSTRIES, LLC	FLS ENERGY	US	NC	COLLECTOR STEP UP	55/65	25	33.33	41.67	115	34.5	0	D-Y	550	200	NO	AT
2017	G3579	3	OG&E CENTRAL DISTR STORE	OKLAHOMA GAS & ELECTRIC	US	OK	SUBSTATION	55/65	7.5	9.38	10.5	138	13.09	0	D-Y	550	110	LV	AT
2017	G3580	1	DASHIELL, LLC	DASHIELL, LLC	US	TX	SUBSTATION	55/65	40	53.2	66.5	138	13.8	0	D-Y	550	110	NO	AT
2017	G3585	2	OG&E CENTRAL DISTR STORE	OG&E CENTRAL DISTR STORE	US	OK	GENERATOR STEP UP	55/65	96	128	160	138	13.8	13.8	Y-D	550	110	NO	AT
2017	G3586	1	OG&E CENTRAL DISTR STORE	OG&E CENTRAL DISTR STORE	US	OK	GENERATOR STEP UP	55/65	48	64	80	138	13.8	0	Y-D	550	110	NO	AT
2017	G3588	1	DASHIELL, LLC	DASHIELL, LLC	US	TX	COLLECTOR STEP UP	65	120	160	200	138	34.5	13.2	Y-Y	550	200	HV	NO
2017	G3593	3	DUKE ENERGY CORPORATION	DUKE ENERGY CORPORATION	US	NC	AUTO	65	268.8	358.4	448	230	115	13.8	Y-Y	900	550	NO	AT
2017	G3601	6	CB&I	CB&I	US	TX	SUBSTATION	65	30	0	0	34.5	13.8	0	D-Y	200	110	NO	AT
2017	G3604	6	CB&I	CB&I	US	TX	SUBSTATION	55/65	12	16	20	138	13.8	0	D-Y	650	110	LV	NO
2017	G3609	2	DOMINION VIRGINIA POWER	DOMINION VIRGINIA POWER	US	NC	AUTO	65	100.8	134.4	168	230	115	13.2	Y-Y	900	550	LV	AT
2017	G3609	2	DOMINION VIRGINIA POWER	DOMINION VIRGINIA POWER	US	VA	AUTO	65	100.8	134.4	168	230	115	13.2	Y-Y	900	550	LV	AT
2017	G3617	2	OG&E CENTRAL DISTR STORE	OG&E CENTRAL DISTR STORE	US	OK	SUBSTATION	65	11.25	15	0	13.8	4.16	0	D-Y	95	75	NO	AT
2017	G3626	1	OG&E CENTRAL DISTR STORE	OG&E CENTRAL DISTR STORE	US	AR	AUTO	55	120	160	200	500	345	13.8	Y-Y	1425	1050	NO	AT
2017	G3628	1	GE ENERGY MANAGEMENT	GE ENERGY MANAGEMENT	US	CT	GENERATOR STEP UP	65	27	0	0	115	12.47	0	Y-D	550	110	NO	AT
2017	G3630	2	DOMINION VIRGINIA POWER	DOMINION VIRGINIA POWER	US	VA	SUBSTATION	65	30	40	50	115	13.8	0	D-Y	550	110	LV	AT
2017	G3642	3	TEXAS ELECTRIC COOPERATIVE	PEDERNALES EC	US	TX	SUBSTATION	55/65	25	33.3	41.7	138	26.18	0	D-Y	650	150	LV	AT
2017	G3644	3	OG&E CENTRAL DISTR STORE	OKLAHOMA GAS & ELECTRIC	US	OK	SUBSTATION	55/65	7.5	9.38	10.5	138	26.18	0	D-Y	550	150	LV	AT
2017	G3646	3	KIEWIT POWER CONSTRUCTOR	INVENERGY	US	PA	GENERATOR STEP UP	65	325	433	540	235	23.5	0	Y-D	900	150	NO	AT
2017	G3647	3	STUART IRBY	LEE COUNTY EC	US	FL	SUBSTATION	55/65	30	40	50	138	24.94	0	D-Y	550	200	NO	AT
2017	G3654	1	KIEWIT POWER CONSTRUCTOR	INVENERGY	US	PA	SUBSTATION	65	43.5	58	72.5	23.5	6.9	0	D-Y	150	95	NO	AT
2017	G3655	1	KIEWIT POWER CONSTRUCTOR	INVENERGY	US	PA	SUBSTATION	65	43.5	58	72.5	23.5	6.9	0	D-Y	150	95	NO	AT
2017	G3657	1	EL PASO ELECTRIC CO	EL PASO ELECTRIC CO	US	TX	SUBSTATION	55/65	7.5	10	11.2	13.8	2.4	0	D-D	150	150	NO	AT
2017	G3658	1	BLACK & VEATCH	BLACK & VEATCH	US	TX	AUTO	65	54	72	90	138	70.5	13.09	Y-Y	550	350	LV	AT
2017	G3659	2	OVERTON POWER DISTRICT	OVERTON POWER DISTRICT	US	NV	SUBSTATION	55/65	20	26.67	33.33	138	12.47	0	D-Y	650	150	NO	AT
2017	G3660	1	APEX WIND ENERGY, INC	APEX WIND ENERGY, INC	US	TX	COLLECTOR STEP UP	65	105	140	175	138	34.5	12.75	Y-Y	650	200	HV	NO

2017	G3663	1	AIR PRODUCTS & CHEMICALS	AIR PRODUCTS & CHEMICALS	US	-	SUBSTATION	55/65	15	20	-	138	4.16	-	D-D	550	-	NO	-
2017	G3673	1	ORLANDO UTILITIES COMMISSION	ORLANDO UTILITIES COMMISSION	US	FL	SUBSTATION	55/65	20	26.6	33.3	115	12.47	0	D-Y	550	110	LV	AT
2017	G3677	1	TEXAS ELECTRIC COOPERATIVE	NEW BRAUNFELS UTILITIES	US	TX	SUBSTATION	55/65	20	26.66	33.33	138	13.09	0	D-Y	550	150	LV	AT
2017	G3678	1	ANIXTER POWER SOLUTIONS	SUNFLOWER EC	US	KS	SUBSTATION	65	15	20	25	34.5	12.47	0	D-Y	200	110	NO	AT
2017	G3679	1	DASHIELL, LLC	DASHIELL, LLC	US	LA	SUBSTATION	55/65	50	56	0	138	13.8	0	D-Y	650	110	NO	AT
2017	G3680	1	DASHIELL, LLC	SPECTRA ENERGY	US	KY	SUBSTATION	65	15	16.8	0	161	13.8	0	D-Y	650	110	NO	AT
2017	G3681	1	AMERICAN ELECTRIC POWER	AMERICAN ELECTRIC POWER	US	TX	AUTO	65	54	72	90	138	70.5	13.09	Y-Y	550	350	NO	AT
2017	G3723	1	PUBLIC SERVICE ELECTRIC & GAS	PUBLIC SERVICE ELECTRIC & GAS	US	NJ	SUBSTATION	65	27	36	45	69	13.8	0	D-Y	350	150	LV	AT
2017	G3725	1	DUKE ENERGY CORPORATION	PROGRESS ENERGY FLORIDA	US	FL	SUBSTATION	55/65	30	40	50	115	24.94	0	D-Y	550	150	LV	AT
2017	G3727	1	DASHIELL, LLC	DASHIELL, LLC	US	TX	SUBSTATION	55/65	12	16	0	138	2.4	0	D-D	550	75	LV	AT
2017	G3728	2	NORTHWESTERN ENERGY	NORTHWESTERN ENERGY	US	MT	SUBSTATION	65	25	33	42	161 x 69	24.94	0	D-Y	750	150	LV	AT
2017	G3729	1	NORTHWESTERN ENERGY	NORTHWESTERN ENERGY	US	MT	AUTO	65	30	40	50	161	69	14.4	Y-Y	750	350	NO	AT
2017	G3730	1	NORTHWESTERN ENERGY	NORTHWESTERN ENERGY	US	SD	SUBSTATION	65	15	20	25	115	13.08	0	D-Y	550	110	LV	AT
2017	G3731	1	ALSTOM GRID INC	GE SOLUTIONS	US	NJ	SUBSTATION	55/65	26.3	35	43.9	230	13.8	0	D-Y	900	110	NO	AT
2017	G3732	1	DASHIELL, LLC	DASHIELL, LLC	US	TX	SUBSTATION	65	25	33	41.7	141	12.47	0	D-Y	550	110	LV	AT
2017	G3733	1	OWENS ILLINOIS INC	OWENS ILLINOIS INC	US	-	SUBSTATION	55/65	10	12.5	-	69 x 115	12.47	-	D-D	350	-	NO	-
2017	G3735	2	ANIXTER POWER SOLUTIONS	FLS AUTOMATION	US	SC	SUBSTATION	55/65	36	48	60	100	34.5	0	D-Y	550	200	LV	AT
2017	G3736	1	STUART IRBY	SUMTER EC	US	FL	SUBSTATION	55/65	20	26.7	33.3	69	4.94 x 12.4	0	D-Y	350	150	LV	AT
2017	G3737	2	ELECTRICAL DISTRICT NO 3	ELECTRICAL DISTRICT NO 3	US	AZ	SUBSTATION	Other	18	24	32	69	12.47	0	D-Y	350	150	LV	AT
2017	G3738	2	JACKSONVILLE ELECTRIC AU	JACKSONVILLE ELECTRIC AUTHORITY	US	FL	SUBSTATION	65	30	40	50	138	27	0	D-Y	550	200	LV	AT
2017	G3739	1	NORTHWESTERN ENERGY	NORTHWESTERN ENERGY	US	MT	SUBSTATION	65	5	7	0	69 x 50.5	3.08 x 4.1	0	D-Y	350	110	NO	AT
2017	G3741	3	WESTERN FARMERS EC	WESTERN FARMERS EC	US	OK	SUBSTATION	55/65	7.5	9.37	0	138	13.2	0	D-Y	650	110	LV	AT
2017	G3744	2	OG&E CENTRAL DISTR STORE	OKLAHOMA GAS & ELECTRIC	US	OK	SUBSTATION	55/65	12	16	20	138	13.8	0	D-Y	550	110	LV	AT
2017	G3745	1	ECO INDUSTRIES	ECO INDUSTRIES	US	ME	COLLECTOR STEP UP	65	15	20	25	115	34.5	13.2	Y-Y	550	200	HV	NO
2017	G3746	1	GE GRID SOLUTIONS, LLC	SUNPOWER CORP.	US	OR	COLLECTOR STEP UP	65	37	49	62	115	34.5	13.2	Y-Y	450	200	HV	NO
2017	G3747	1	DOMINION VIRGINIA POWER	DOMINION VIRGINIA POWER	US	VA	SUBSTATION	65	33.6	44.8	56	230	36.5	0	D-Y	900	200	LV	NO
2017	G3751	1	TEXAS ELECTRIC COOPERATIVE	TRINITY VALLEY EC	US	TX	SUBSTATION	55/65	15	20	25	134	24.94	0	D-Y	550	150	NO	AT
2017	G3755	1	NORTHWESTERN ENERGY	NORTHWESTERN ENERGY	US	MT	SUBSTATION	65	25	33	42	161	4.94 x 13.(	0	D-Y	750	150	LV	AT
2017	G3756	1	NORTHWESTERN ENERGY	NORTHWESTERN ENERGY	US	MT	SUBSTATION	65	25	33	42	102	13.08	0	D-Y	550	110	LV	AT
2017	G3757	1	NORTHWESTERN ENERGY	NORTHWESTERN ENERGY	US	MT	SUBSTATION	65	25	33	42	69	13.08	0	D-Y	350	110	LV	AT
2017	G3758	3	NORTHWESTERN ENERGY	NORTHWESTERN ENERGY	US	MT	SUBSTATION	65	15	20	25	102	13.08	0	D-Y	550	110	LV	AT
2017	G3761	3	OG&E CENTRAL DISTR STORE	OKLAHOMA GAS & ELECTRIC	US	OK	SUBSTATION	55/65	10	12.5	14	69	4.16	0	D-Y	350	60	NO	AT
2017	G3763	1	BLACK HILLS POWER	BLACK HILLS POWER	US	SD	SUBSTATION	55/65	12	16	20	67	12.47	0	D-Y	350	110	LV	AT
2017	G3764	1	OG&E CENTRAL DISTR STORE	OKLAHOMA GAS & ELECTRIC	US	OK	SUBSTATION	55/65	15	20	25	161	36.2	0	D-Y	650	200	LV	AT
2017	G3766	1	PROENERGY SERVICES	PROENERGY SERVICES	US	TX	GENERATOR STEP UP	65	45	60	75	115	13.8	0	Y-D	550	110	NO	AT
2017	G3768	2	GE GRID SOLUTIONS, LLC	VERMONT ELEC POWER CO	US	VT	STATIC VAR COMPESATOR	65	40.4	53.87	67.34	115	18	0	Y-D	550	150	NO	NO
2017	G3769	1	DUKE ENERGY CORPORATION	DUKE ENERGY CORPORATION	US	FL	AUTO	55/65	120	160	200	115	69	13.8	Y-Y	550	350	LV	AT
2017	G3779	2	ANIXTER POWER SOLUTIONS	CITY OF NEWBERRY	US	SC	SUBSTATION	55/65	20	26.66	33.33	115	24.94	0	D-Y	550	150	NO	AT
2017	G3803	1	DASHIELL, LLC	DASHIELL, LLC	US	CA	COLLECTOR STEP UP	65	50	67	83.3	92	34.5	13.2	Y-Y	450	200	NO	AT
2017	G3806	1	LOUISVILLE GAS ELEC CO	LOUISVILLE GAS & ELECTRIC	US	KY	GENERATOR STEP UP	65	175.8	0	0	345	20.9	0	Y-D	1050	150	NO	AT
2017	G3813	1	HOOSIER ENERGY REC INC	HOOSIER ENERGY REC INC.	US	IN	AUTO	55/65	180	240	300	345	138	13.8	Y-Y	1050	650	NO	AT
2017	G3815	1	HOOSIER ENERGY REC INC	HOOSIER ENERGY REC INC.	US	IN	AUTO	55/65	37.5	50	62.5	138	69	13.8	Y-Y	650	350	LV	AT
2017	G3816	1	DUKE ENERGY CORPORATION	DUKE ENERGY CORPORATION	US	IN	SUBSTATION	65	8.4	10.5	0	69 x 34.5	4.16	0	D-Y	350	75	LV	AT
2017	G3817	1	DUKE ENERGY CORPORATION	PROGRESS ENERGY FLORIDA	US	FL	AUTO	55/65	90	120	150	138	69	13.8	Y-Y	650	350	LV	AT
2017	G3819	1	GE GRID SOLUTIONS, LLC	AIR FORCE	US	CA	SUBSTATION	65	15	20	25	71.9	34.5	0	D-Y	350	200	LV	AT
2017	G3822	1	NORTHWESTERN ENERGY	NORTHWESTERN ENERGY	US	MT	SUBSTATION	65	15	20	25	230	4.94 x 13.(	0	D-Y	900	150	LV	AT
2017	G3823	1	NORTHWESTERN ENERGY	NORTHWESTERN ENERGY	US	MT	SUBSTATION	65	12	16	20	115	4.94 x 4.1	0	D-Y	550	150	LV	AT
2017	G3824	1	NORTHWESTERN ENERGY	NORTHWESTERN ENERGY	US	MT	SUBSTATION	65	12	16	20	50	3.08 x 4.1	0	D-Y	350	110	LV	AT
2017	G3835	2	TEXAS A&M UNIVERSITY	TEXAS A&M UNIVERSITY	US	TX	SUBSTATION	65	25	33.3	41.67	138	12.47	0	D-Y	650	110	LV	AT
2017	G3838	2	WESTERN FARMERS EC	WESTERN FARMERS EC	US	OK	SUBSTATION	55/65	12	16	20	138	13.2	0	D-Y	650	110	LV	AT
2017	G3846	1	MA MORTENSON	MORTENSON	US	SC	COLLECTOR STEP UP	65	46	61	76	115	34.5	0	D-Y	450	200	NO	AT
2017	G3848	2	DASHIELL, LLC	DASHIELL, LLC	US	TX	SUBSTATION	55/65	40	53.2	66.5	138	25	0	D-Y	550	200	NO	AT
2017	G3849	1	CB&I	LYONDELL	US	TX	SUBSTATION	55/65	25	33	42	69	12.47	0	D-Y	350	110	NO	AT
2017	G3861	1	DUKE ENERGY CORPORATION	DUKE ENERGY CORPORATION	US	IN	SUBSTATION	65	13.4	17.9	22.4	69	13.09	0	D-Y	350	110	LV	AT
2017	G3862	2	ENEL GREEN POWER NORTH A	ENEL GREEN POWER NORTH A	US	OK	COLLECTOR STEP UP	65	100	133	167	345	34.5	13.2	Y-Y	1050	200	HV	NO
2017	G3863	1	ENEL GREEN POWER NORTH A	ENEL GREEN POWER NORTH A	US	OK	COLLECTOR STEP UP	65	96	120	150	345	34.5	13.2	Y-Y	1050	200	HV	NO
2017	G3864	1	ENEL GREEN POWER NORTH A	ENEL GREEN POWER NORTH A	US	OK	COLLECTOR STEP UP	65	109	136	170	345	34.5	13.2	Y-Y	1050	200	HV	NO
2017	G3865	1	OG&E CENTRAL DISTR STORE	OKLAHOMA GAS & ELECTRIC	US	OK	SUBSTATION	55/65	12	16	20	161	13.09	0	D-Y	650	110	LV	AT
2017	G3868	2	SABER POWER SERVICES LLC	ENTERPRISE PRODUCTS CO	US	TX	SUBSTATION	65	12	16	20	138	12.47	0	D-Y	550	110	NO	AT
2017	G3869	1	ANIXTER POWER SOLUTIONS	LAMAR COUNTY ELEC COOP	US	TX	SUBSTATION	55/65	12	16	20	138	4.94 x 12.4	0	D-Y	550	150	NO	AT
2017	G3870	1	NORTHWESTERN ENERGY	NORTHWESTERN ENERGY	US	MT	AUTO	65	30	40	50	102	50	14.4	Y-Y	550	350	LV	AT
2017	G3873	2	DOMINION VIRGINIA POWER	DOMINION VIRGINIA POWER	US	NC	SUBSTATION	65	33.6	44.8	56	115	36.5	0	D-Y	550	200	LV	AT
2017	G3874	1	DAKOTA SUPPLY GROUP	CITY OF CHASKA	US	MN	SUBSTATION	55/65	30	40	50	115	13.8	0	D-Y	550	110	LV	AT

2017	G3875	2	OG&E CENTRAL DISTR STORE	OKLAHOMA GAS & ELECTRIC	US	OK	SUBSTATION	55/65	24	32	40	138	13.09	0	D-Y	550	110	LV	AT
2017	G3876	2	DASHIELL, LLC	DASHIELL, LLC	US	TX	SUBSTATION	55/65	25	28	0	138	4.16	0	D-Y	550	95	NO	AT
2017	G3877	2	STUART IRBY	NOVEC	US	VA	SUBSTATION	55/65	30	40	50	230	13.2	0	D-Y	900	110	LV	AT
2017	G3879	1	PACIFICORP	PACIFICORP	US	UT	SUBSTATION	65	18	24	30	138	13.2	0	D-Y	550	110	LV	AT
2017	G3881	2	NTERPRISE PRODUCTS OPERATING LL	ENTERPRISE PRODUCTS CO	US	TX	SUBSTATION	55/65	10	12.5	15.6	24.9	4.16	0	Y-Y	150	75	NO	AT
2017	G3883	1	BLACK HILLS POWER	BLACK HILLS POWER	US	SD	SUBSTATION	55/65	10	12.5	0	67	12.47	0	D-Y	350	110	LV	AT
2017	G3884	2	TEXAS ELECTRIC COOPERATIVE	PRIORITY POWER MANAGEMENT	US	NM	SUBSTATION	55/65	33	44	55	115	24.94	0	D-Y	550	150	LV	AT
2017	G3886	1	DUKE ENERGY CORPORATION	DUKE ENERGY CORPORATION	US	NC	SUBSTATION	55/65	7.5	10	12.5	115	13 x 4.33	0	D-Y	550	110	NO	AT
2017	G3890	6	TEXAS ELECTRIC COOPERATIVE	PEDERNALES EC	US	TX	SUBSTATION	55/65	25	33.3	41.7	138	26.18	0	D-Y	650	150	LV	AT
2017	G3896	2	OG&E CENTRAL DISTR STORE	OKLAHOMA GAS & ELECTRIC	US	OK	SUBSTATION	55/65	15	20	25	138	36.2	0	D-Y	550	200	LV	AT
2017	G3899	1	CH2MHILL	GE AVIATION	US	OH	SUBSTATION	55/65	20	26.6	33.3	138	13.2	0	D-Y	650	150	LV	AT
2017	G3901	3	OG&E CENTRAL DISTR STORE	OKLAHOMA GAS & ELECTRIC	US	OK	SUBSTATION	65	18	24	30	138	26.18	0	D-Y	650	150	LV	AT
2017	G3902	1	OG&E CENTRAL DISTR STORE	OKLAHOMA GAS & ELECTRIC	US	OK	SUBSTATION	55/65	7.5	9.37	10.5	69	26.18	0	D-Y	350	150	LV	AT
2017	G3903	1	NORTHWESTERN ENERGY	NORTHWESTERN ENERGY	US	MT	SUBSTATION	65	10	14	0	69	13.08	0	D-Y	350	110	LV	AT
2017	G3905	1	SABER POWER SERVICES LLC	SABER POWER SERVICES LLC	US	TX	SUBSTATION	55/65	20	22.4	0	25	4.16	0	D-Y	150	75	NO	AT
2017	G3906	1	SABER POWER SERVICES LLC	SABER POWER SERVICES LLC	US	TX	SUBSTATION	55/65	25	28	0	25	4.16	0	D-Y	150	75	NO	AT
2017	G3911	2	ANADARKO E&P ONSHORE LLC	ANADARKO PETROLEUM	US	TX	SUBSTATION	55/65	60	80	100	138	13.8	0	D-Y	650	110	LV	AT
2017	G3914	1	SABER POWER SERVICES LLC	WATERLOO NORTH HYDRO	US	TX	SUBSTATION	55	12.5	15.6	0	69	4.16	0	D-Y	350	110	NO	AT
2017	G3915	1	SABER POWER SERVICES LLC	WATERLOO NORTH HYDRO	US	TX	SUBSTATION	55	12.5	15.6	0	138	4.16	0	D-Y	550	75	NO	AT
2017	G3917	2	TEXAS ELECTRIC COOPERATIVE	PRIORITY POWER MANAGEMENT	US	TX	SUBSTATION	65	25	33.3	41.6	138	24.94	0	D-Y	650	150	LV	AT
2017	G3920	1	SOUTHERN CO SERVICES INC	SOUTHERN CO SERVICES INC	US	ME	COLLECTOR STEP UP	65	100	0	0	115	34.5	0	D-Y	450	200	LV	AT
2017	G3923	1	STUART IRBY	AUBREY SILVEY ENTERPRISE	US	TX	SUBSTATION	65	12.5	15.6	0	138 x 69	4.16	0	D-Y	650	110	NO	AT
2017	G3929	2	DOMINION VIRGINIA POWER	DOMINION VIRGINIA POWER	US	VA	SUBSTATION	65	45	60	75	23	14.145	0	D-Y	150	110	NO	AT
2017	G3936	1	TEXAS ELECTRIC COOPERATIVE	LEA COUNTY EC	US	NM	SUBSTATION	55/65	15	20	25	67	12.47	0	D-Y	350	150	NO	AT
2018	G3265	7	DUKE ENERGY CORPORATION	DUKE ENERGY CORPORATION	US	FL	AUTO	55/65	200	266.66	333.33	512	230	13.8	Y-Y	1550	900	HV	NO
2018	G3568	3	AMERICAN ELECTRIC POWER	AMERICAN ELECTRIC POWER	US	OH	AUTO	65	405	540	675	345	138	34.5	Y-Y	1050	650	NO	AT
2018	G3682	3	AMERICAN ELECTRIC POWER	AMERICAN ELECTRIC POWER	US	TX	AUTO	65	54	72	90	138	70.5	13.09	Y-Y	550	350	LV	AT
2018	G3696	1	AMERICAN ELECTRIC POWER	AMERICAN ELECTRIC POWER	US	-	SUBSTATION	65	15	20	25	138	13.09	-	D-D	550	-	-	-
2018	G3706	1	AMERICAN ELECTRIC POWER	AMERICAN ELECTRIC POWER	US	TX	SUBSTATION	65	15	20	25	138 x 69	13.09	0	D-Y	550	110	NO	AT
2018	G3716	1	AMERICAN ELECTRIC POWER	AMERICAN ELECTRIC POWER	US	OH	SUBSTATION	65	15	20	25	68.8	13.09	0	D-Y	350	110	LV	AT
2018	G3866	1	PUBLIC SERVICE ELECTRIC & GAS	PUBLIC SERVICE ELECTRIC & GAS	US	NJ	SUBSTATION	65	27	36	45	69	13.8	0	D-Y	350	150	LV	AT
2018	G3867	1	DUKE ENERGY CORPORATION	DUKE ENERGY CORPORATION	US	IN	SUBSTATION	65	13.4	17.9	22.4	69	34.5	0	D-Y	350	200	NO	AT
2018	G3904	1	FIRST ENERGY CORP	FIRSTENERGY	US	PA	SUBSTATION	65	16.8	22.4	0	69	13.2	0	D-Y	350	150	LV	AT
2018	G3907	1	STUART IRBY	JACKSONVILLE ELECTRIC AUTHORITY	US	FL	SUBSTATION	65	30	40	50	69	27	0	D-Y	350	200	LV	AT
2018	G3910	9	TEXAS ELECTRIC COOPERATIVE	BRAZOS ELECTRIC COOP.	US	TX	SUBSTATION	65	30	40	50	134	26.4	0	D-Y	550	200	LV	AT
2018	G3927	1	DUKE ENERGY CORPORATION	DUKE ENERGY CORPORATION	US	OH	SUBSTATION	65	20.2	26.9	33.6	69	34.5	0	D-Y	350	200	LV	AT
2018	G3928	1	TEXAS ELECTRIC COOPERATIVE	CENTRAL TEXAS EC	US	TX	SUBSTATION	55/65	12	16	20	138	26.18	0	D-Y	550	150	LV	AT
2018	G3932	2	NORTHWESTERN ENERGY	NORTHWESTERN ENERGY	US	MT	SUBSTATION	65	25	33	42	102	13.08	0	D-Y	550	110	LV	AT
2018	G3934	1	NORTH AMERICAN STAINLESS	NORTH AMERICAN STAINLESS STEEL	US	KY	SUBSTATION	55/65	90	134	0	345	34.5	0	D-Y	1050	200	NO	AT
2018	G3938	2	PROENERGY SERVICES	PROENERGY SERVICES	US	TX	GENERATOR STEP UP	65	120	160	200	230	13.8	0	Y-D	900	150	NO	AT
2018	G3940	1	AMEREN	AMEREN	US	MO	SUBSTATION	65	50.4	67.2	84	161	69	0	D-Y	650	350	LV	AT
2018	G3947	2	TEXAS ELECTRIC COOPERATIVE	DEAF SMITH EC	US	TX	SUBSTATION	55/65	12	16	20	115	25	0	D-Y	550	150	NO	AT
2018	G3950	1	DASHIELL, LLC	DASHIELL, LLC	US	TX	GENERATOR STEP UP	55/65	25	33.3	41.56	138	13.8	0	D-Y	650	110	NO	AT
2018	G3951	1	STUART IRBY	RAPPAHANNOCK EC	US	VA	SUBSTATION	55/65	25	33	42	135	36.2	0	D-Y	550	200	LV	AT
2018	G3973	2	ENGINEERED SOFTWARE	ESP	US	TX	SUBSTATION TRANSFORMER	55/65	13	16.25	0	138	13.2	0	D-Y	550	110	BT	AT
2018	G3974	2	DASHIELL, LLC	Dashiell	US	TX	SUBSTATION TRANSFORMER	55/65	16	17.92	0	138	4.16	0	D-Y	550	75	NO	AT
2018	G3957	2	STUART IRBY	AUBREY SILVEY	US	MS	SUBSTATION TRANSFORMER	55/65	25	33.3	41.6	230	13.8	0	D-Y	900	150	BT	AT
2018	G3958	2	OG&E CENTRAL DISTR STORE	OKLAHOMA GAS & ELECTRIC	US	OK	SUBSTATION TRANSFORMER	55/65	30	40	50	138	13.8	0	D-Y	550	110	BT	AT
2018	G3961	1	STUART IRBY	Withlacoochee River Electric Coop	US	FL	SUBSTATION TRANSFORMER	55/65	30	40	50	69	24.94	0	D-Y	350	150	BT	AT
2018	G3967	2	NORTHWESTERN ENERGY	NORTHWESTERN ENERGY	US	MT	SUBSTATION TRANSFORMER	65	15	20	25	230	13.08	0	D-Y	900	110	BT	AT

4360 SOUTH 90TH ST
OMAHA NE 68127-1310
Phone: 402-592-7676
Fax: 402-331-8207

To: DEPT OF UTILITIES
3000 E 1ST ST
FREMONT NE 68025-6415
Attn: Nate
Phone: 402-727-2600
Fax:
Email: connie.hergenrader@graybar.com

Date: 06/15/2020
Proj Name: SUBSTATION TRANSFORMERS
GB Quote #: 0235579403
Release Nbr:
Purchase Order Nbr:
Additional Ref#
Valid From: 06/15/2020
Valid To: 07/15/2020
Contact: CONNIE HERGENRADER
Email: connie.hergenrader@graybar.com

Proposal

We Appreciate Your Request and Take Pleasure in Responding As Follows

Item	Item/Type	Quantity	Supplier	Catalog Nbr	Description	Price	Unit	Ext.Price
100		2 EA	GE-PROLEC	THREE PHASE SUBSTATION TRANSFORMER		$599,274.61	1	$1,198,549.22

Item Note: **Three phase, oil immersed, Substation Transformer, 15/20/25//28 MVA, ONAN/ONAF/ONAF/ONAF @ 65°C, 60 Hz, 55/65°C temperature rise, high voltage of 69 kV Delta connection with No Load Tap Changer, low voltage of 13.80 kV Wye connection with Load Tap Changer.**
-We are quoting these transformers EX Works (Incoterms 2010) Factory in Apodaca, N.L. México. Refer to section 5.4.
-Dry Air Shipment.

101		2 EA	GE-PROLEC	7% SALES TAX ON TRANSFORMER		$44,949.22	1	$89,898.44
200		2 EA	GE-PROLEC	DELIVERY		$25,979.00	1	$51,958.00

Item Note: **Unit price adder to deliver this transformer DDP (Incoterms 2010) nearest the final destination in Fremont, NE US.**

Buyer shall provide, at its own expense, free and clear access to PGE and PGE's subcontractors for purposes of inspecting access routes to the delivery pad (if applicable). If such access is not allowed within thirty (30) days after execution or expedition of a binding Purchase Order, the quoted freight price shall be subject to applicable extra costs as necessary, according to PGE's subcontractor's inspections. Should PGE or its subcontractor deem it necessary to make modifications to access routes, or to use special equipment or maneuvers in order to perform proper delivery, Buyer shall make such modifications and/or bear the costs for any special equipment or maneuvers to be used.

Upon arrival by GE Prolec or GE Prolec's subcontractors in charge of freight for delivery, the Purchaser shall promptly begin the applicable actions in order for proper delivery and reception to take place. If such actions are not started within 24 hours after arrival of the Products, the Purchaser shall hold GE Prolec harmless from and against any and all costs which GE Prolec might incur by reason of such delay, including but not limited to demurrage costs.

This equipment and associated installation charges may be financed for a low monthly payment through Graybar Financial Services (subject to credit approval). For more information call 1-800-241-7408 to speak with a leasing specialist.

To learn more about Graybar, visit our website at www.graybar.com **24-Hour Emergency Phone#: 1-800-GRAYBAR**

This Graybar quote is based on the terms of sale in the EV2370 Master Agreement which can be found by clicking the link found at https://www.omniapartners.com/hubfs/PUBLIC%20SECTOR/Supplier%20Information/Graybar/EV2370_Graybar_MAD_2017_12_20.pdf

To: DEPT OF UTILITIES
3000 E 1ST ST
FREMONT NE 68025-6415
Attn: Nate

Date: 06/15/2020
Proj Name: SUBSTATION TRANSFORMERS
GB Quote #: 0235579403

Proposal

We Appreciate Your Request and Take Pleasure in Responding As Follows

201	2 EA	GE-PROLEC	7% SALES TAX ON DELIVERY	$1,818.53	1	$3,637.06
300	2 EA	GE-PROLEC	FOR OFF-LOADING AND PLACE ON PAD	$11,340.00	1	$22,680.00

Item Note: **Unit price adder for off-loading and place on pad. For truck shipment.**
"Considering free and clear access to the substation pad"
The price is valid if service is performed no later than three (3) months after the transformer shipment date. If performed later a price adjustment will apply

301	2 EA	GE-PROLEC	7% SALES TAX ON OFF-LOADING	$793.80	1	$1,587.60
400	2 EA	GE-PROLEC	FIELD ASSEMBLY	$42,886.00	1	$85,772.00

Item Note: **Unit price adder for field assembly, drying process, vacuum oil filling and field tests.**
-For Non Union Site: Union Labor is NOT considered in the scope.
-The price is valid if service is performed no later than three (3) months after the transformer shipment date. If performed later a price adjustment will apply.

401	2 EA	GE-PROLEC	7% SALES TAX ON FIELD ASSEMBLY	$3,002.02	1	$6,004.04
500	1 EA	GE-PROLEC	HV BUSHING	$2,252.63	1	$2,252.63
600	1 EA	GE-PROLEC	LV BUSHING	$1,351.58	1	$1,351.58

This equipment and associated installation charges may be financed for a low monthly payment through Graybar Financial Services (subject to credit approval). For more information call 1-800-241-7408 to speak with a leasing specialist.

To learn more about Graybar, visit our website at www.graybar.com **24-Hour Emergency Phone#: 1-800-GRAYBAR**

This Graybar quote is based on the terms of sale in the EV2370 Master Agreement which can be found by clicking the link found at https://www.omniapartners.com/hubfs/PUBLIC%20SECTOR/Supplier%20Information/Graybar/EV2370_Graybar_MAD_2017_12_20.pdf

To: DEPT OF UTILITIES
3000 E 1ST ST
FREMONT NE 68025-6415
Attn: Nate

Date: 06/15/2020
Proj Name: SUBSTATION TRANSFORMERS
GB Quote #: 0235579403

Proposal

We Appreciate Your Request and Take Pleasure in Responding As Follows

700	1 EA	GE-PROLEC	NEUTRAL BUSHING	$1,351.58	1	$1,351.58
800	1 EA	GE-PROLEC	SET OF GASKETS	$1,689.47	1	$1,689.47
900	1 EA	GE-PROLEC	FAN	$1,013.68	1	$1,013.68
1000	1 EA	GE-PROLEC	ELECTRONIC TEMPERATURE MONITOR	$7,771.61	1	$7,771.61

Total in USD (Tax not included): $1,475,516.91

This equipment and associated installation charges may be financed for a low monthly payment through Graybar Financial Services (subject to credit approval). For more information call 1-800-241-7408 to speak with a leasing specialist.

To learn more about Graybar, visit our website at www.graybar.com **24-Hour Emergency Phone#: 1-800-GRAYBAR**

This Graybar quote is based on the terms of sale in the EV2370 Master Agreement which can be found by clicking the link found at https://www.omniapartners.com/hubfs/PUBLIC%20SECTOR/Supplier%20Information/Graybar/EV2370_Graybar_MAD_2017_12_20.pdf

STAFF REPORT

TO: Utility and Infrastructure Board

FROM: Troy Schaben, Assistant City Administrator - Utilities

DATE: June 30, 2020

SUBJECT: Investment Grade Audit Municipal Building

Recommendation: Approve Investment Grade Audit Contract with Navitas for $25,000 and forward to City Council.

Background: The City Council approved Navitas as the City's Energy Services Company (ESCO) at the February 11, 2020 meeting.

Navitas evaluates each of the City's facilities at no cost and determines if there are potential energy savings that would offset the improvement costs to reach these savings.

When a project is identified, an Investment Grade is required. Approval from the UIB/City Council is required prior to expending any funds. Staff requests approval of an Investment Grade Audit for the Municipal Building for a fee of $25,000.

Fiscal Impact: Budgeted $500,000 for upgrades to Air Handling Unit and Controls

Investment Grade Audit Agreement

This agreement ("Agreement") for an Investment Grade Audit is made and entered into as of February _____, 2020 between Navitas, LLC with its business office located at 25501 West Valley Parkway, Olathe, KS 66061 ("Navitas") and the City of Fremont, with its business office located at 400 E Military Ave, Fremont NE 68025 ("Owner"). The Owner and Navitas may be referred to herein individually as a "Party" and collectively as the "Parties".

Whereas, Navitas is a company with experience and technical and management capabilities to provide for the discovery, auditing, design, engineering, procurement, installation, financing, maintenance, and monitoring of energy and water savings measures; and

Whereas, on November 14, 2019, Owner issued a Request for Proposal for a Guaranteed Energy Saving Performance Contract; and

Whereas, on (Insert Date Here), 2020 the City of Fremont approved Navitas to partner with and assist Owner in developing and implementing a Guaranteed Energy Savings Performance Contract. The City of Fremont approved Navitas to proceed with an Investment Grade Audit; and

Whereas, Owner enters into this Agreement to determine the feasibility of energy and operation cost reduction initiatives and other related facility infrastructure improvements, as well as other professional services as may be agreed upon, and ultimately plans to implement an energy savings performance contract within 60 days of receipt of the Proposal for a Guaranteed Energy Savings Performance Contract;

Whereas, a product of this Agreement shall be an Investment Grade Audit Report and project proposal ("Project Proposal") for project implementation in which Owner may enter into a separate Guaranteed Energy Savings Performance Contract with Navitas; and

Now therefore, the Parties agree as follows:

1. **Facilities**
   Owner's facilities under this Agreement are included in Exhibit A attached hereto (the "Facilities").

2. **Investment Grade Audit Scope of Work**
   Navitas agrees to perform an investment grade Investment Grade Audit ("IGA") in accordance with the scope of work described herein. The IGA by Navitas will be an interactive approach in working with the Owner which will include a preliminary assessment of needs and opportunities, followed by further detailed analysis and preparation of a proposal for a guaranteed energy savings performance contract.
   2.1. Data and Background Information Collection
      2.1.1. Navitas will obtain energy and water use information from Owner or Owner's suppliers that includes at least the most recent 36 months of historical cost and use

information for electricity, natural gas, water and other energy fuels consumed at Owner's Facilities.

2.1.2. Owner will provide Navitas with information concerning facility operation and energy use including, but not limited to the following:

2.1.2.1. Construction date of building and major additions

2.1.2.2. Occupancy and scheduled usage information

2.1.2.3. Description of future plans regarding building modifications or planned equipment modifications or replacements

2.1.2.4. Access to building drawings, as available, that may include mechanical, plumbing, electrical, temperature controls, structural, architectural, modifications, and remodels

2.1.2.5. Existing heating, ventilating, and air conditioning (HVAC) equipment data such as OEM submittals, nameplate, model information or other factory data or specifications

2.1.2.6. Records of maintenance expenditures on energy consuming equipment, systems or building envelope including any service contracts in effect

2.1.2.7. Description of energy management procedures utilized, and methods used for scheduling Facilities

2.1.3. Owner agrees to furnish Navitas accurate and complete data and information it has available. Where information is not available from Owner, Navitas will make a diligent effort to collect such information through facility inspections and staff interviews. Navitas agrees to work diligently to assess validity of information provided by Owner to confirm or correct as needed.

2.1.4. Owner will arrange for Navitas to have remote access, through the user or operator interface software, to access existing building temperature control systems that are computerized for the purpose of evaluating existing programming, sequence of operations, schedules, set-points, overrides, etc.

2.2. Facilities Survey to Identify Potential Measures

2.2.1. Navitas will interview facility management and maintenance staff, or others as the Parties agree upon, regarding facility operation including:

2.2.1.1. energy management procedures

2.2.1.2. equipment maintenance problems

2.2.1.3. comfort problems and standard requirements

2.2.1.4. equipment reliability

2.2.1.5. occupancy and use schedules

2.2.1.6. past and planned facility alterations

2.2.2. Navitas will inspect and prepare documents quantifying major energy consuming equipment or systems, including:

2.2.2.1. Lighting (indoor and outdoor)

2.2.2.2. Heating, ventilating, and cooling systems and related distribution and equipment

2.2.2.3. Temperature control systems and equipment

2.2.2.4. Domestic hot water systems

2.2.2.5. Special systems such as kitchen, swimming pools, laundry, etc.
2.2.2.6. Building envelope such as roofs, doors, windows, and insulation
2.2.2.7. Water consuming systems including restroom fixtures, irrigation systems, etc.
2.2.2.8. Other energy consuming systems

2.2.3. Navitas may install data-logging equipment, as Navitas determines appropriate, with consent of Owner, for the purpose of determining operating conditions such as lighting "on-off" patterns, space temperatures, equipment run-hours, etc. In addition, Navitas will interview staff and review equipment operating logs kept by Owner to determine past operating and scheduling practices. Owner will allow Navitas reasonable access to Facilities during both occupied and unoccupied hours.

2.2.4. Navitas will develop a list of potential energy and water savings measures or other facility improvements based on consideration of comfort and maintenance problems, energy use and efficiency, hours of operation, remaining useful life, adequacy of purpose given current or future needs, and feasibility of system replacement. Navitas will identify measures which appear likely to be cost effective and thereby warrant detailed analysis. For each measure, Navitas will prepare estimates of energy, water, and maintenance cost savings including a description of savings analysis methodology and assumptions used to estimate savings. Future capital cost avoidance may also be considered. Navitas will review this list with Owner at a workshop to determine priority for detailed analysis.

2.3. Establish Base Year Consumption

2.3.1. Navitas will enter energy use information in its proprietary energy analysis software tool for the purposes of creating individual use reports, graphs and charts for each facility, comparing year-over-year analysis reports, benchmarking of comparable use facilities, and an overall summary of historical energy and water use on a monthly basis. Navitas will establish a base year energy consumption and cost. Navitas will reconcile end-use estimated consumption with the annual base year consumption to establish reasonable limits on potential savings.

2.4. Energy Conservation Measure Analysis

2.4.1. Navitas will identify Energy Conservation Measures ("ECM") and for each ECM will develop cost estimates for installation including all design fees, permits, bonding, commissioning, equipment, and labor costs for turn-key construction of a fully functional system.

2.4.2. Navitas will utilize ASHRAE, IES, DOE, or other recognized authority standards to develop savings methodology and engineering principles identified in the ECM description and calculations.

2.4.3. Navitas will develop a preliminary measurement and verification plan for each ECM.

2.4.4. As it deems necessary, Navitas will prepare conceptual sketches or drawings to depict complete system replacements.

2.5. Project Proposal

2.5.1. In anticipation of Navitas and Owner entering into a Guaranteed Energy Savings Performance Contract to design, install and monitor the energy and water savings measures recommended, Navitas will prepare a Project Proposal of terms to be

incorporated in an energy performance contract to include ECM savings analysis, turnkey implementation cost, measurement and verification of savings method and plan, implementation schedule, and impact to Owner's future maintenance and operation.

2.5.2. Coincident with the completion of the IGA work and Owner's notification that it has accepted all, or some portions, of Navitas' Project Proposal, Navitas will prepare and submit to Owner a Guaranteed Energy Savings Performance Contract detailing the terms and conditions related to implementation of the Project Proposal.

2.5.3. ECMs or facility improvement measures recommended and included in the Project Proposal will meet all current codes and any other applicable requirements of federal, state, and local government. Navitas will not be expected to resolve any existing code violations but shall report to Owner if any such violations are found.

3. Engineering Services

3.1. Navitas will provide engineering design services for Owner agreed upon selected HVAC replacement and other approved scopes. Navitas will prepare design drawings for review at a design workshop with Owner and will be sufficient to procure equipment quotes and competitively bid out scopes of work. Navitas and Owner will hold periodic review workshops to communicate and come to agreement on design decisions.

3.2. Additional engineering design services that are needed for final design, permitting, or other agreed upon changes to the design will be incorporated into the construction phase of the project.

4. Guaranteed Energy Savings Performance Contract Proposal

4.1. Upon Owner's approval of the construction design bidding documents, Navitas shall competitively bid out scopes of work, including equipment and sub-contractors so that a final guaranteed cost estimate can be prepared.

4.2. Based on the energy engineering work outlined above in the Investment Grade Audit, Navitas will prepare guaranteed energy savings for the agreed upon scope of work.

4.3. Navitas will prepare a formal proposal for project implementation. The proposal for implementation will be a guaranteed savings energy performance contract including, but not limited to:

4.3.1. Final program costs

4.3.2. Identified vendors and contractors

4.3.3. Guaranteed savings

4.3.4. Implementation schedule

5. Performance Period

5.1. Navitas' receipt of an executed copy of this Agreement shall be evidence of Owner's agreement to the terms and conditions of the IGA and its authorization of and notification to Navitas to proceed with the IGA. Navitas will thereafter promptly initiate the IGA work.

5.2. Within ten (10) days of executing this Agreement, Navitas and Owner will meet for a kick-off meeting to define the audit schedule of the IGA for the Facilities.

5.3. Navitas agrees to complete the IGA for all Facilities and present to the Owner the Project Proposal within 150 calendar days from the execution of this Agreement. Navitas and Owner may mutually agree to extend all associated deadlines for this Agreement in the event the Owner wishes to expand the scope of work to a degree sufficient enough to warrant an extension, (e.g. a major capital infrastructure project is added to the scope of work/project).

6. Compensation

6.1. The IGA fee ("IGA Fee"), for services provided by Navitas under this Agreement is $25,000.

6.2. If Owner and Navitas enter a Guaranteed Energy Savings Performance Contract, Owner will not be billed the IGA Fee due under this Agreement as the total cost for the Guaranteed Energy Savings Performance Contract shall be all inclusive and include the IGA Fee.

6.3. Owner hereby agrees that if it does not execute a Guaranteed Energy Savings Performance Contract with Navitas within ninety (90) days of submission of the Project Proposal, Owner shall compensate Navitas for the IGA Fee for all Facilities identified in Exhibit A that are included as part of the Project. The IGA Fee shall be fully earned, due and payable by Owner to Navitas no later than one hundred-twenty (120) days after the date Navitas submits the Project Proposal to Owner and the Agreement will terminate without further liability to either Party.

6.4. Should Owner, during the IGA, terminate this Agreement by written notice to Navitas, Owner shall pay Navitas all proportional IGA Fee amounts earned up to the date of termination. Navitas will be entitled to no other payments in case of termination and the Agreement will terminate without any further liability to either Party.

7. Indemnity

Navitas agrees to indemnify Owner, their officers, agents, directors, and employees from third party claims, demands, suits for bodily injury, including death, or tangible property damage resulting from and to the extent of Navitas' intentional misconduct or negligent acts. Owner expressly agrees Navitas shall be responsible only for such injury or damaged caused by the intentional misconduct or negligent act or omission of Navitas' employees or agents and Navitas shall not be responsible for any injury or damage caused by Owner or any third-party.

8. Liability

In no event shall Navitas be liable for any special, consequential, incidental, or indirect damages including, without limitation, loss of profits, loss or use of the Facilities or other property, or business interruption, howsoever caused, in connection with this Agreement.

9. Insurance

9.1. Prior to commencing work under this Agreement, Navitas shall provide to Owner a certificate of insurance confirming Navitas' insurance coverage. Navitas shall maintain such insurance in full force and effect at all times until the IGA has been completed.

9.2. Navitas shall maintain Comprehensive General Liability Insurance written on an "occurrence" basis. Such insurance shall bear a combined single limit per occurrence of $500,000 and annual aggregate of not less than $1,000,000 exclusive of defense costs. Such insurance will name Owner as an additional insured only with respect to Navitas' negligent acts or omissions and shall contain standard cross-liability or severability of interest provisions.

9.3. Navitas shall maintain Comprehensive Automobile Liability Insurance written on an "occurrence" basis. Such insurance shall bear a combined single limit per occurrence of $500,000 and annual aggregate of not less than $1,000,000 exclusive of defense costs.

9.4. Worker's Compensation insurance in accordance with State statutes and limits.

9.5. Owner preserves all immunities recognized at law. Nothing herein shall be construed as a waiver of Sovereign Immunity or Governmental Immunity by whatever name as set forth in Nebraska statute. Any insurance purchased by Navitas hereto is not intended to act as a waiver, nor is it a waiver of any defense available to the Owner and its employees by statute or at common law.

10. Applicable Law

10.1. Navitas shall comply with all applicable federal, state, and local statutes, regulations, ordinances or other legal requirements that apply to the scope of work under this Agreement.

10.2. This Agreement shall be governed by and construed in accordance with the laws of Nebraska.

11. Dispute Resolution

The Parties will attempt in good faith to resolve any controversy or claim arising of, or relating to this Agreement, or breach thereof (collectively referred to as "Dispute") promptly by negotiation between representatives of the Parties who have authority to settle the Dispute. If a Dispute cannot be settled through negotiation, the Parties agree first to try in good faith to settle the

Dispute by mediation before resorting to arbitration, litigation, or some other dispute resolution technique. Disputes which remain unresolved will be subject to litigation exclusively in the State of Kansas.

12. Miscellaneous Provisions

12.1. Any failure of either Party to require strict performance by the other Party, or any waiver by one Party of any requirement under this Agreement, shall not be deemed to be consent to, or a waiver of, any continuing or subsequent failure or breach.

12.2. If any provision of this Agreement is held by a court of competent jurisdiction to be unenforceable, no other provision shall be affected thereby, and the remainder of this Agreement shall be interpreted as if it did not contain such unenforceable provision.

12.3. This Agreement and exhibits and attachments hereto, if any, shall (a) constitute the entire agreement between the Parties relating to the subject matter hereof, (b) supersede all previous agreements, discussions, communications and correspondences with respect to the subject matter hereof and (c) only be amended, supplemented or modified by a written instrument executed by both Parties.

12.4. Navitas as author of the Agreement will be subject to the rule of construction that any ambiguities be resolved against Navitas.

12.5. If, in Navitas sole judgment, the energy savings opportunity is insufficient to warrant development of an energy performance contract, Navitas may terminate this Agreement without further obligation from the Owner. In such circumstance, Owner will have no obligation to pay Navitas the compensation identified in Section 4.1.

12.6. Navitas and Owner represent and warrant to each other that (a) the execution, delivery and performance of this Agreement have been duly authorized and approved by all necessary organizational action on the part of such Party, (b) the signatories hereto have been duly authorized by all necessary organizational action of such Party to sign and deliver this Agreement and (c) upon execution of this Agreement will constitute a legal, valid and binding obligations of such Parties.

12.7. Prior to commencement of the work, Navitas shall provide to Owner a sworn affidavit and other sufficient documentation to affirm its enrollment and participation in a federal work authorization program with respect to the employees working in connection with this Agreement. Navitas shall also provide Owner a sworn affidavit affirming that it does not knowingly employ any person who is an unauthorized alien in connection with the contracted services.

12.8. Prior to commencement of the work, Navitas shall notify Owner if Navitas' owner has been convicted of a felony. The notice must include a general description of the conduct resulting in the conviction of the felony. Owner may terminate this Agreement if it determines Navitas failed to give the required notice or misrepresented the conduct resulting in the conviction.

12.9. The relationship of Owner and Navitas is one of owner and independent contractor and not master and servant or joint venturers. Except as specifically provided herein, Navitas does not have the authority to act for and on behalf of Owner.

12.10. Navitas will provide the Owner with clear criminal record and child abuse checks prior to the presence of any Navitas employee on the Owner's premises prior to initiation of audit work.

In Witness Whereof, the Parties hereto have caused this Agreement to be executed in one or more counterparts and by the hands of their proper officers duly authorized in that behalf as of the day and year first above written.

Owner

Signature: _____

Printed Name: _____

Title: _____

Date Signed: _____

Navitas

Signature: _____

Printed Name: _____

Title: _____

Date Signed: _____

Exhibit A
Investment Grade Audit Agreement
Facilities

The following Facilities are included under the Investment Grade Audit Agreement Scope of Work entered between Navitas, LLC and the City of Fremont.

Building	Address	Square Feet
City Administration Building	400 E. Military Ave, Fremont NE 68025	23,100
Christensen – Main Arena	1730 W. 16th Street, Fremont NE 68025	22,213
Senior Center	1730 W. 16th Street, Fremont NE 68025	12,861

STAFF REPORT

TO: Utility and Infrastructure Board Members

FROM: Jody Sanders, CPA, Director of Finance

DATE: June 30, 2020

SUBJECT: Termination of Municipal Advisory Services

Recommendation: Recommend to the City Council approval of Resolution 2020-134 terminating the long-term for municipal financial advisory services with Ameritas Investment Corp.

Background: In July 2018, the City entered into a long-term (three-year) contract with Ameritas Investment Corp. to provide municipal financial advisory services. In October 2019, the City was informed by John Trecek of Ameritas that Ameritas had interpreted Municipal Securities Rule-making Board (MSRB) Rule G-23(d)(ii) to require the termination of this agreement. The concept is that establishing the role of the financial advisor either as an underwriter of the City's bond issues for a negotiated sale, or as a municipal advisor for a competitive sale is required on an issue-by-issue basis.

This really is a housekeeping item, since Ameritas provided the language contained in the attached letter.

Fiscal Impact: None

CITY OF FREMONT NEBRASKA

400 East Military Avenue, Fremont, NE 68025-5141

July 1, 2020

John Trecek
Ameritas Investment Corp.
440 Regency Parkway Dr, Suite 222
Omaha, NE 68114

RE: Notice of termination of the Agreement for Financial Consultant and Advisor services dated October 30, 2018

Dear John,

I appreciate the information that you shared regarding the above-referenced agreement. As I understand it, Ameritas has taken the position that Municipal Securities Rule-making Board (MSRB) Rule G-23(d) implies that consent should be obtained on an issue-by-issue basis, making the City's agreement in conflict with that rule. Accordingly, the City's notice of termination follows:

Pursuant to the terms of paragraph 4A. of the Agreement for Financial Consultant and Advisor services dated October 30, 2018, and in-line with MSRB Rules, notice is hereby given of the decision by the City of Fremont to terminate this inactive agreement. The City retains the right to enter into a new municipal advisory arrangement upon such time the City has identified a need for municipal advisory services pertaining to a specific identified financing that the City is considering.

It has been a pleasure working with you over the years, and I wish you all the best!

Sincerely,

Jody J. Sanders
Director of Finance/Treasurer

Finance/Accounting • Phone: 402-727-2627 • Fax: 402-727-2625